FRAMELESS GLASS RAILINGS

umakov®

2023/2024

1 AL PROFILE SYSTEMS

4 - 63

2 GLASS ADAPTERS

64 - 71

3 SPIGOTS

72 - 77

4 GLASS CONNECTORS HANDRAIL HOLDERS FOR GLASS

78 - 85

5 CAP RAILS

86 - 101

6 LED HANDRAILS

102 - 109

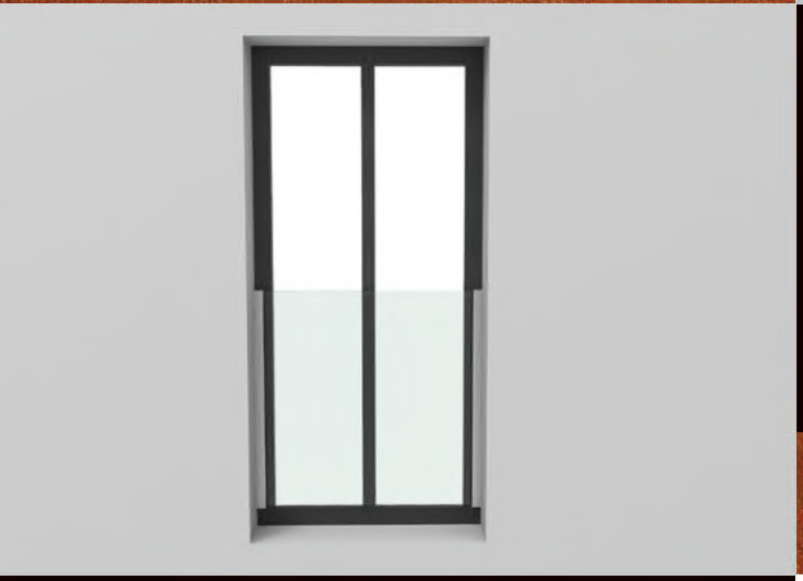

7 JULIET BALCONY

110 - 111

8 ACCESSORIES

112 - 128

1 AL PROFILE SYSTEMS

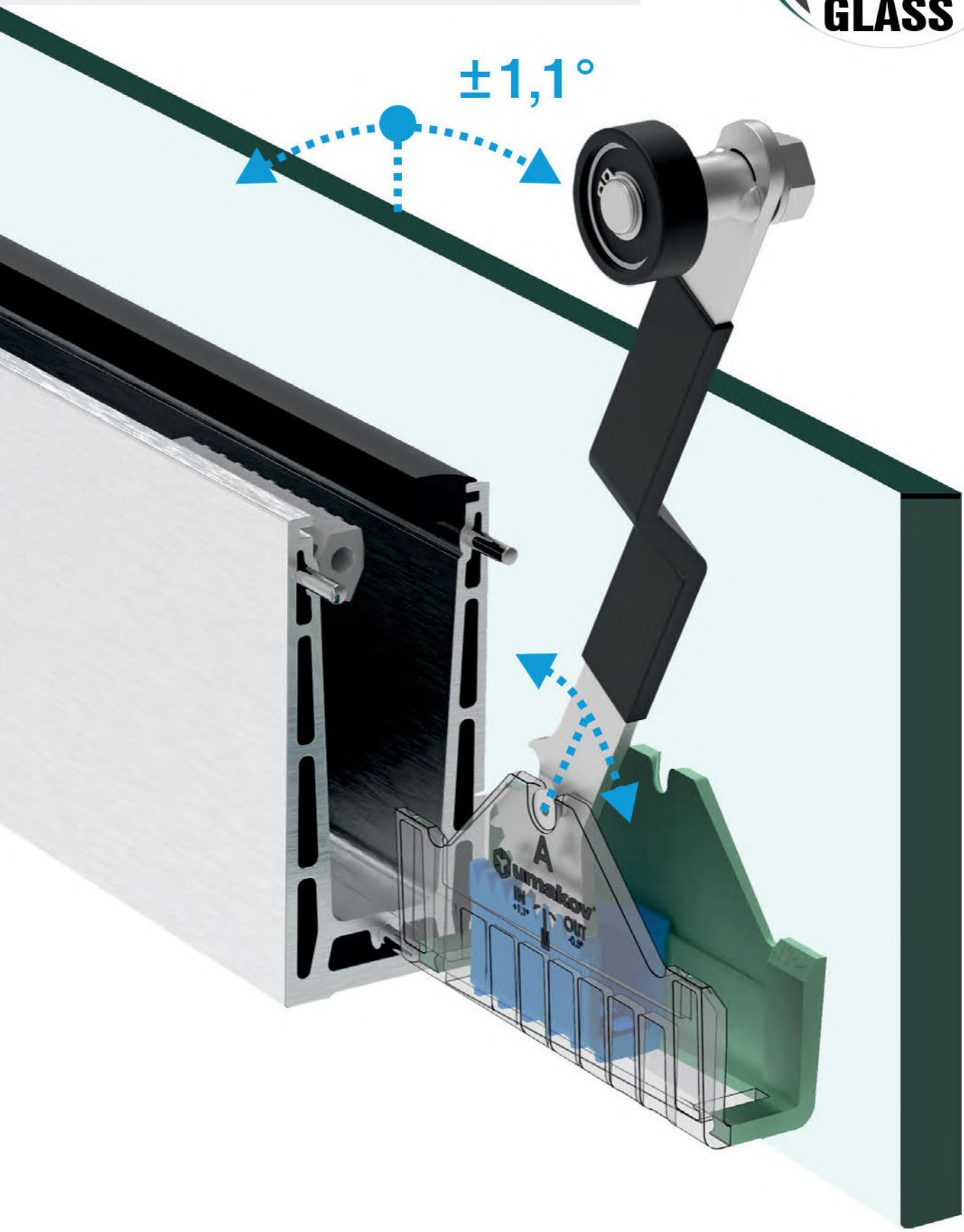

U PROFILES TOP MOUNT FIX	AL/0004 AL/0004-ECO AL/NX50-SEG AL/CL40-SEG AL/0008
FLEX	AL/0004-LIGHT AL/0004-UnoXL
FIX, FLEX	AL/0004-PRO AL/0019

L PROFILES TOP MOUNT FIX	AL/0006 AL/0006-ECO
FIX, FLEX	AL/0006-UNO AL/0018

U PROFILES SIDE MOUNT FIX	AL/0005-D AL/0009
FLEX	AL/0005-UNO

Y PROFILES SIDE MOUNT FIX	AL/0011
FIX, FLEX	AL/0011-ProXL

GLASS SETS	AL/ZALVR...004 AL/ZALVR...006 AL/ZALBR...005 AL/ZALBR...011

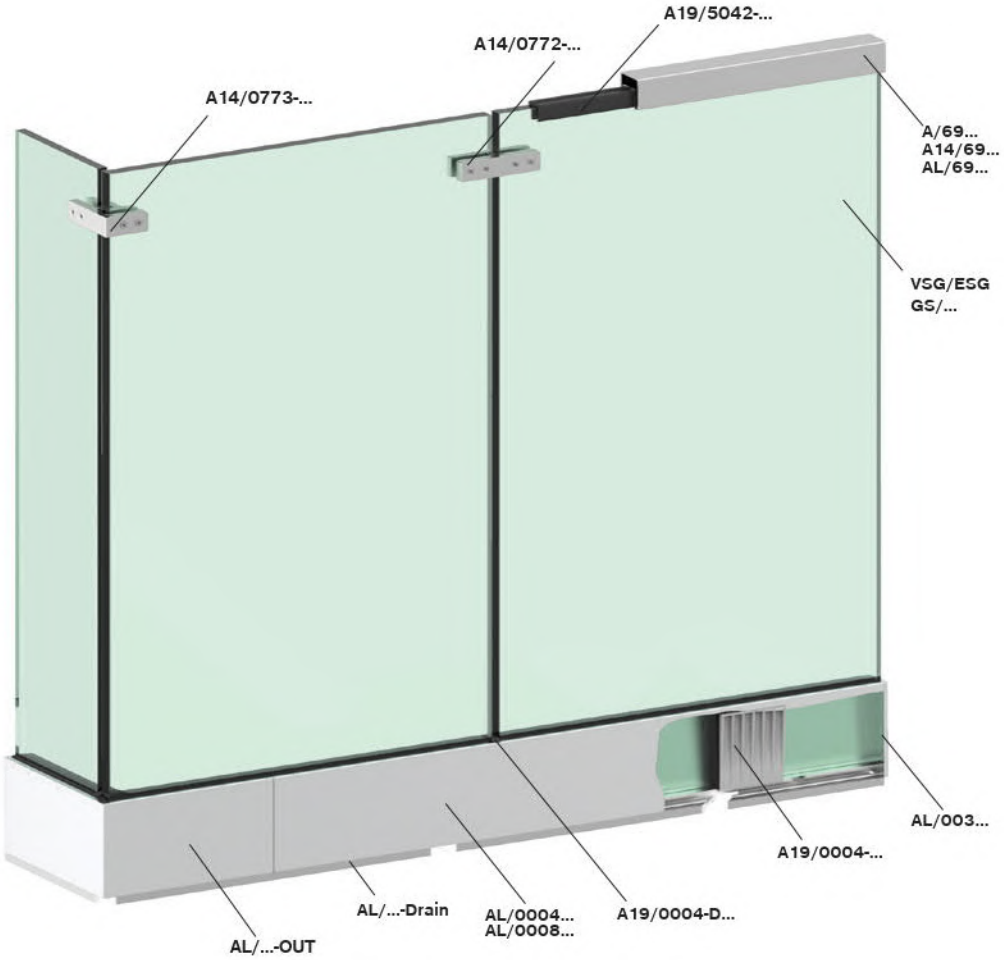
A19/5042-...
A14/0772-...
A14/0773-...
A/69...
A14/69...
AL/69...
VSG/ESG
GS/...
AL/003...
A19/0004-...
AL/...-Drain
AL/0004...
AL/0008...
A19/0004-D...
AL/...-OUT

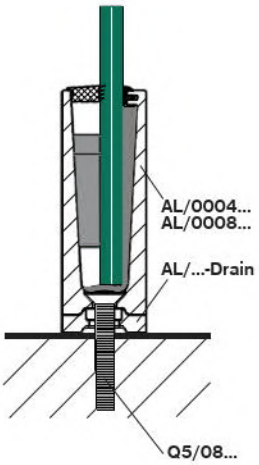
AL/0004...
AL/0008...
AL/...-Drain
Q5/08...

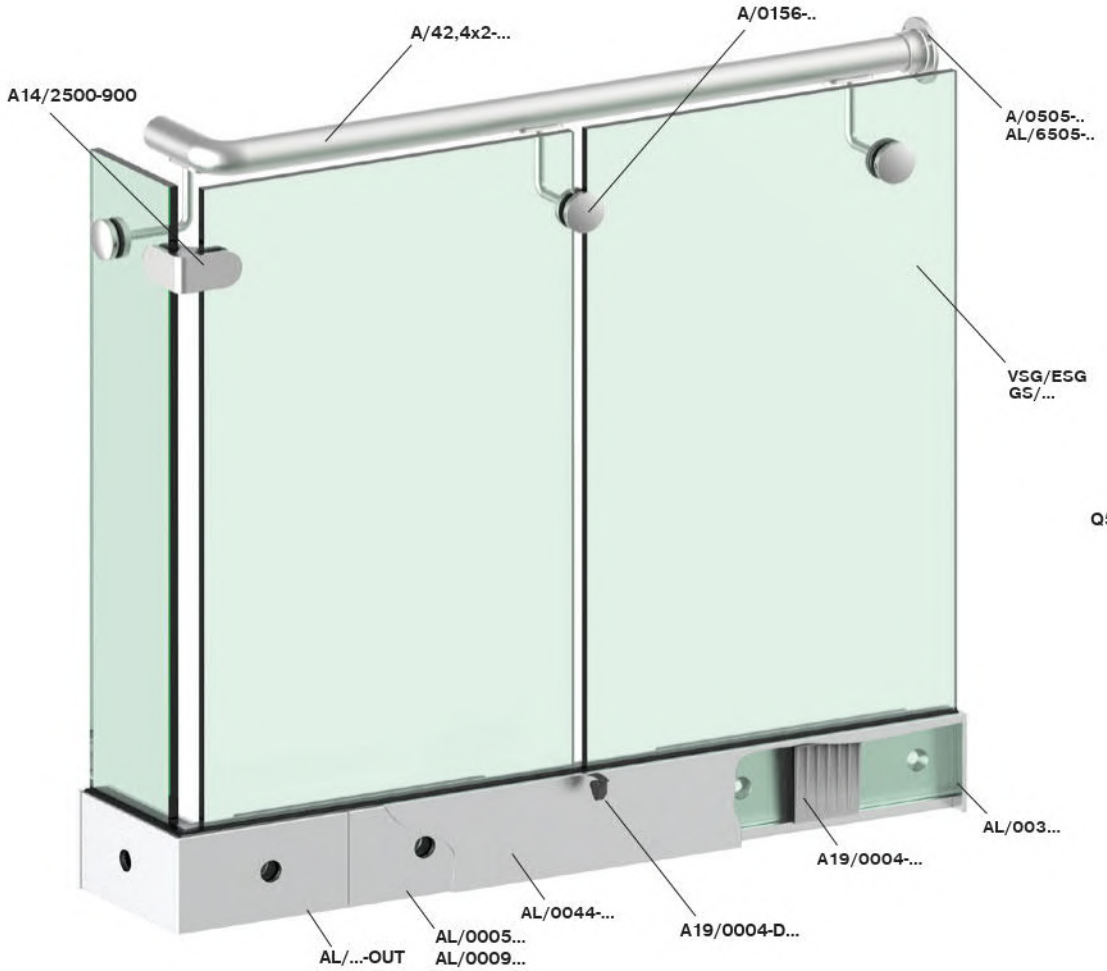
A/42,4x2-...
A/0156-..
A14/2500-900
A/0505-..
AL/6505-..
VSG/ESG
GS/...
AL/003...
A19/0004-...
AL/0044-...
A19/0004-D...
AL/0005...
AL/0009...
AL/...-OUT

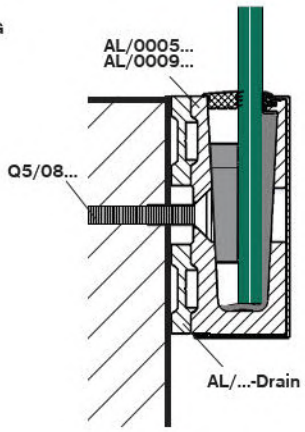
AL/0005...
AL/0009...
Q5/08...
AL/...-Drain

Material	Finish	Effect	art.	L	G/h	glass t	kg/m	FLEX	FIX	
ANODIZED ALUMINIUM	satin	silver	AL/0004-1250-S-E	1250	2,5kN	12-21,52	5,7	-	✓	top
			AL/0004-2500-S-E	2500						
			AL/0004-5000-S-E	5000						
			AL/0004-6000-S-E	6000						
		INOX	AL/0004-2500-S-VA-EXCLUSIVE	2500						
			AL/0004-5000-S-VA-EXCLUSIVE	5000						
	natural	silver	AL/0004-ECO-2500-S-E	2500	1kN	12-21,52	4,8	-	✓	
			AL/0004-ECO-5000-S-E	5000						
			AL/0004-ECO-6000-S-E	6000						
			AL/0004-ECO-6000-N							
		black	AL/0004-ECO-2500-S-EB	2500						
			AL/0004-ECO-5000-S-EB	5000						
	satin	silver	AL/NX50-SEG150-S-E	150	1kN	16,76-17,52 20,76-21,52	7,2	-	✓	new
			AL/NX50-SEG300-S-E	300						
			AL/CL40-SEG150-S-E	150	1kN	12,76-13,52 16,76-17,52	3	-	✓	new
			AL/CL40-SEG300-S-E	300						
			AL/0004-LIGHT-2500-S-E	2500	0,5 kN	12-17,52	4,1	✓	-	new
			AL/0004-LIGHT-5000-S-E	5000						
			AL/0004-UnoXL-2500-S-E	2500	1kN	16,76-21,52	5,6	✓		new
			AL/0004-UnoXL-5000-S-E	5000						
			AL/0004-PRO-2500-S-E	2500	2kN (3kN*)	12-17,52 20,76-21,52	6,2	✓ -	✓	new
			AL/0004-PRO-5000-S-E	5000						
			AL/0004-PRO-6000-S-E	6000						
			AL/0008-2500-S-E	2500	3kN	21,52-25,52	8,6	-	✓	
			AL/0008-5000-S-E	5000						
			AL/0019-2500-S-E	2500	3kN	16,76-21,52 24,76-31,52	10	✓ -	✓	new
			AL/0019-5000-S-E	5000						

* **3kN** - info according to the test protocol 03/23

Material	Finish	Effect	art.	L	G/h	glass t	kg/m	FLEX	FIX	
ANODIZED ALUMINIUM	satin	silver	AL/0006-1250-S-E	1250	3kN	12-21,52	7	-	✓	top
			AL/0006-2500-S-E	2500						
			AL/0006-5000-S-E	5000						
			AL/0006-6000-S-E	6000						
			AL/0006-ECO-2500-S-E	2500	1kN	12-21,52	5,9	-	✓	
			AL/0006-ECO-5000-S-E	5000						
			AL/0006-ECO-6000-S-E	6000						
		black	AL/0006-ECO-2500-S-EB	2500						
			AL/0006-ECO-5000-S-EB	5000						
	natural	silver	AL/0006-ECO-6000-N	6000						
	satin	silver	AL/0006-UNO-2500-S-E	2500	1kN	12-17,52	6	✓	-	new
			AL/0006-UNO-5000-S-E	5000						
			AL/0018-2500-S-E	2500	3kN	16,76-21,52 24,76-31,52	12,2	✓ -	✓	new
			AL/0018-5000-S-E	5000						

Material	Finish	Effect	art.	L	G/h	glass t	kg/m	FLEX	FIX
ANODIZED ALUMINIUM	satin	silver	AL/0005-UNO-2500-S-E	2500	1kN	12-17,52	6,2	✓	-
			AL/0005-UNO-5000-S-E	5000					
			AL/0005-D-1250-S-E	1250	2,5kN	12-21,52	6,3	-	✓
			AL/0005-D-2500-S-E	2500					
			AL/0005-D-5000-S-E	5000					
			AL/0005-D-6000-S-E	6000					
		black	AL/0005-D-2500-S-EB	2500					
			AL/0005-D-5000-S-EB	5000					
		silver	AL/0009-2500-S-E	2500	3kN	21,52-25,52	8,6	-	✓
			AL/0009-5000-S-E	5000					

Material	Finish	Effect	art.	L	G/h	glass t	kg/m	FLEX	FIX	
ANODIZED ALUMINIUM	natural	silver	AL/0011-1250-N-E	1250	3kN	12-21,52	9	-	✓	
			AL/0011-2500-N-E	2500						
			AL/0011-5000-N-E	5000						
			AL/0011-6000-N-E	6000						
		black	AL/0011-2500-N-EB	2500						
			AL/0011-5000-N-EB	5000						
ANODIZED ALUMINIUM		silver	AL/0011-ProXL-2500-N-E	2500	2kN	16,76-21,52 24,76-31,52	8,5	✓ -	✓	new
			AL/0011-ProXL-5000-N-E	5000						

MODEL 0004 FIX series

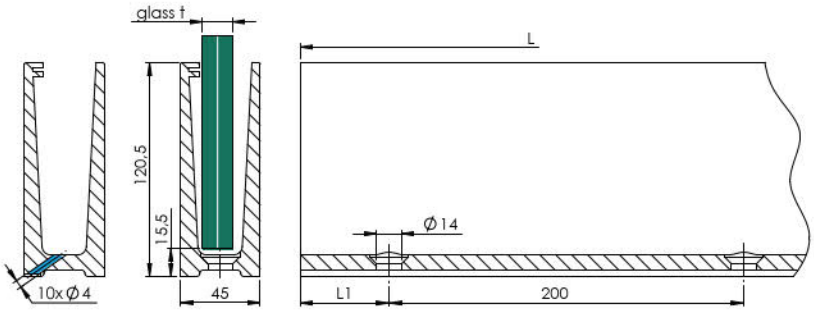

AL/0004-...S-E-Drain

AL/0004-...S-E
AL/0004-...S-VA..

Material	Finish	Effect	art.	L	L1	G/h	glass t	AL/0004-S-E-Drain	built in drain
ANODIZED ALUMINIUM	satin	silver	AL/0004-1250-S-E	1250		1kN	12,00-21,52		
			AL/0004-2500-S-E	2500	50			✓	
			AL/0004-5000-S-E	5000	100				
			AL/0004-6000-S-E	6000					
			AL/0004-5000-S-E-Drain	5000					built in drain
		black	AL/0004-5000-S-EB-Drain						
		INOX	AL/0004-2500-S-VA-EXCLUSI	2500	50			✓	
			AL/0004-5000-S-VA-EXCLUSI	5000	100				

...ANGLE

Material	Finish	Effect	art.
ANODIZED ALUMINIUM	satin	silver	AL/0034-004-S-E
		INOX	AL/0034-004-S-VA-EX
		silver	AL/0034-004-S-E-ANGLE

new

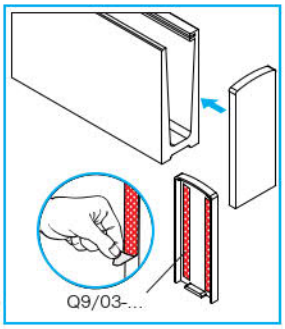

new

Quality	Finish	art.
PETG	gray	A19/glass-stop

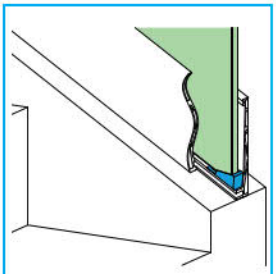

for **glass t** (12-21,52)
for **slope angle** (≤ 45°)

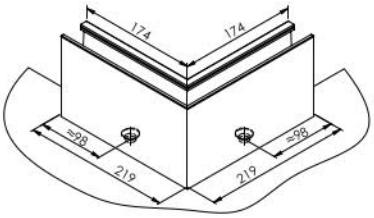

Material	Finish	Effect	art.
ANODIZED ALUMINIUM	satin	silver	AL/0004-S-E-90-IN
		INOX	AL/0004-S-VA-EX-90-IN

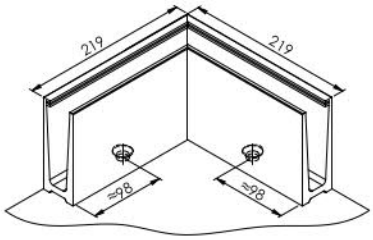

Material	Finish	Effect	art.
ANODIZED ALUMINIUM	satin	silver	AL/0004-S-E-90-OUT
		INOX	AL/0004-S-VA-EX-90-OUT

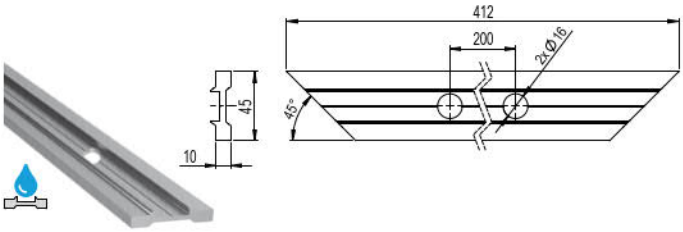

Material	Finish	Effect	art.	compatibility	pcs
ANODIZED ALUMINIUM	satin	silver	AL/0004-S-E-Drain	AL/0004-1250...	4
				AL/0004-2500...	7
				AL/0004-5000...	13
				AL/0004-6000...	15

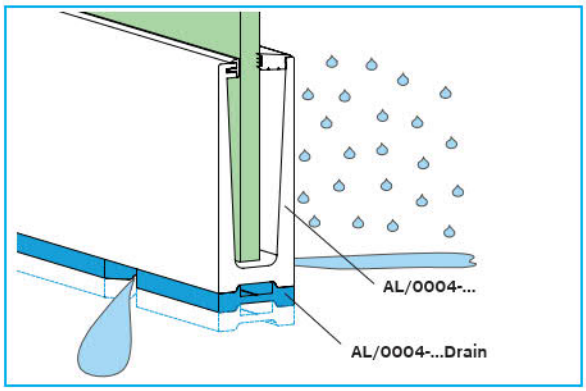

MODEL 0004 FIX series

Glass t (mm)	L (m)	art.
12 (12)	2,5	A19/0004-012-02.5
	5	A19/0004-012-05.0
	25	A19/0004-012-25.0
12,76 (66.2)	2,5	A19/0004-013-02.5
	5	A19/0004-013-05.0
	25	A19/0004-013-25.0
16,76 (88.2)	2,5	A19/0004-017-02.5
	5	A19/0004-017-05.0
	25	A19/0004-017-25.0
17,52 (88.4)	2,5	A19/0004-018-02.5
	5	A19/0004-018-05.0
	25	A19/0004-018-25.0
20,76 (1010.2)	2,5	A19/0004-021-02.5
	5	A19/0004-021-05.0
	25	A19/0004-021-25.0
21,52 (1010.4)	2,5	A19/0004-022-02.5
	5	A19/0004-022-05.0
	25	A19/0004-022-25.0

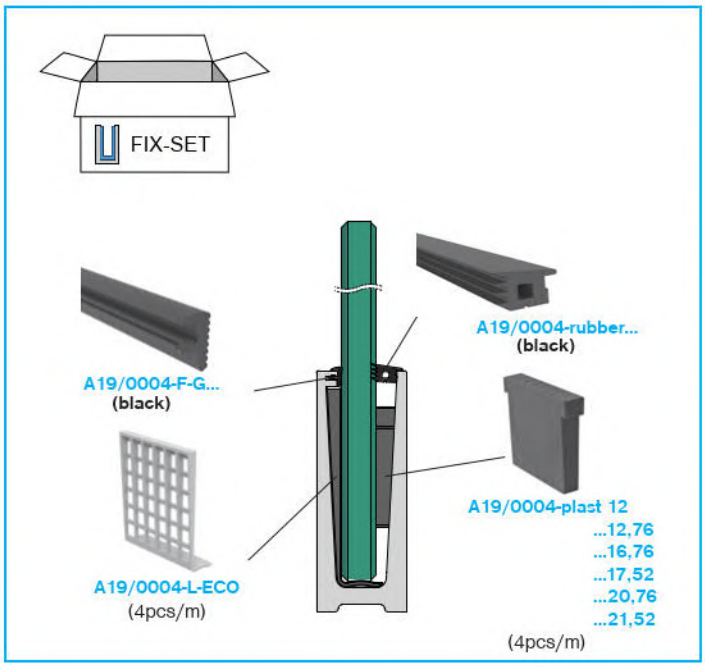

PVC-P - interier

EPDM - exterier

Quality	Finish	art.	L(m)	glass t
Rubber	gray (interier)	A19/0004-F-G-02.5	2,5	12-21,52
		A19/0004-F-G-05.0	5	
		A19/0004-F-G-25.0	25	
	black (exterier)	A19/0004-F-B-02.5	2,5	
		A19/0004-F-B-05.0	5	
		A19/0004-F-B-06.0	6	
		A19/0004-F-B-25.0	25	

PVC-P - interier

EPDM - exterier

Quality	Finish	art.	L(m)	glass t
Rubber	gray (interier)	A19/0004-17-18-G-02.5	2,5	16,76-17,52
		A19/0004-17-18-G-05.0	5	
		A19/0004-17-18-G-25.0	25	
	black (exterier)	A19/0004-rubber12-13-02.5	2,5	12,76-13,52
		A19/0004-rubber12-13-05.0	5	
		A19/0004-rubber12-13-06.0	6	
		A19/0004-rubber12-13-25.0	25	
		A19/0004-rubber17-18-02.5	2,5	16,76-17,52
		A19/0004-rubber17-18-05.0	5	
		A19/0004-rubber17-18-06.0	6	
		A19/0004-rubber17-18-25.0	25	
		A19/0004-rubber21-22-02.5	2,5	20,76-21,52
		A19/0004-rubber21-22-05.0	5	
		A19/0004-rubber21-22-06.0	6	
		A19/0004-rubber21-22-25.0	25	

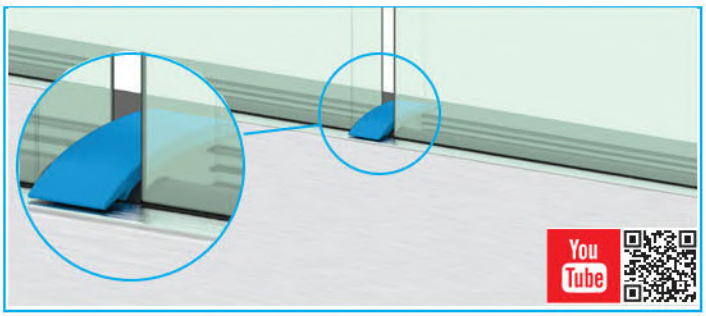

Quality	Finish	art.	L	glass t
Rubber	black	A19/0004-D-B-100	100	12-21,52

AL/0004	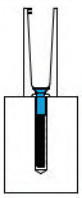		+	
		AL ANCHORS 56-57		
ANCHORS	CHEMICAL		5pcs/m	1pcs/2,5m
	MECHANICAL	5pcs/m		

new

Material	Finish	art.
AISI304	natural	Q10/ANGLE-0-3-60

new

Material	Finish	art.
AISI304	natural	Q10/60-M16/M10

MODEL 0004-ECO FIX series

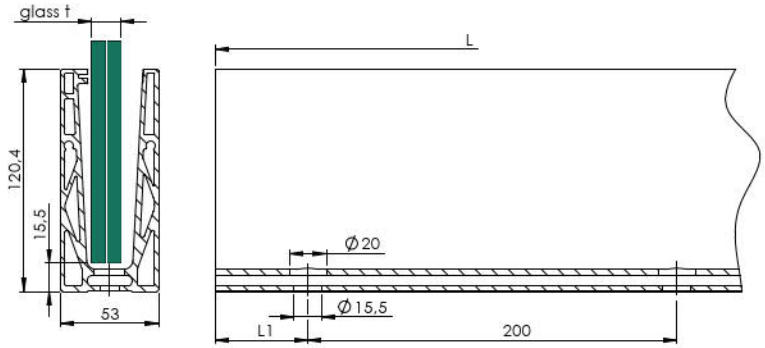

Material	Finish	Effect	art.	L	L1	G/h	glass t	AL/0004-ECO-Drain
ANODIZED ALUMINIUM	satin	silver	AL/0004-ECO-2500-S-E	2500	50	1kN	12,00-21,52	✓
			AL/0004-ECO-5000-S-E	5000	100			
			AL/0004-ECO-6000-S-E	6000				
		black	AL/0004-ECO-2500-S-EB	2500	50			
			AL/0004-ECO-5000-S-EB	5000	100			
	natural	silver	AL/0004-ECO-6000-N	6000				

new

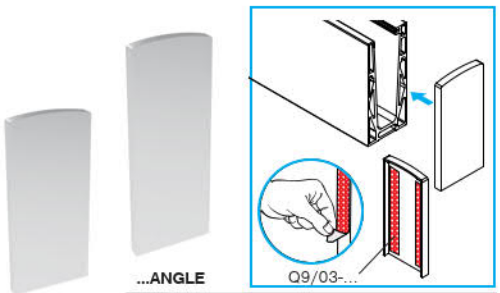

Material	Finish	Effect	art.
ANODIZED ALUMINIUM	satin	silver	AL/0034-004-ECO-S-E
		black	AL/0034-004-ECO-S-EB
		silver	AL/0034-004-ECO-S-E-ANGLE

new

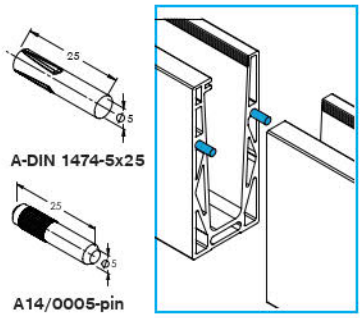

Material	Finish	art.
AISI304	satin	A-DIN 1474-5x25
AISI316		A14/0005-pin

new

new

Material	Finish	art.
AISI304	natural	Q10/ANGLE-0-3-60

new

Material	Finish	art.
AISI304	natural	Q10/60-M16/M10

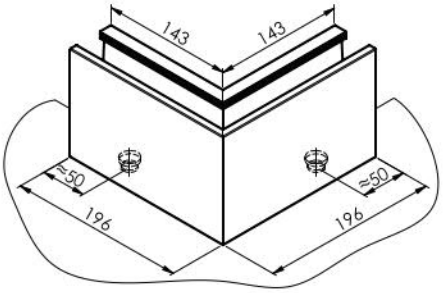

Material	Finish	Effect	art.
ANODIZED ALUMINIUM	satin	silver	AL/0004-ECO-S-E-90-IN
		black	AL/0004-ECO-S-EB-90-IN

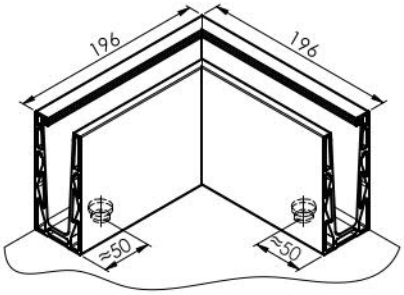

Material	Finish	Effect	art.
ANODIZED ALUMINIUM	satin	silver	AL/0004-ECO-S-E-90-OUT
		black	AL/0004-ECO-S-EB-90-OUT

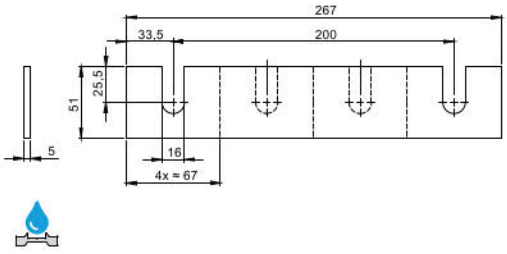

Material	Finish	art.	compatibility	Pcs/m
AISI304	satin	A/0004-ECO-Drain	AL/0004-ECO-...-S-E AL/0004-ECO-...-S-EB	2,5

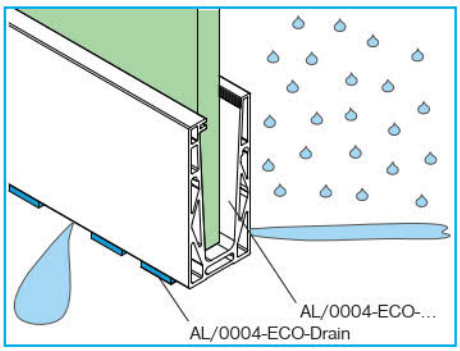

MODEL 0004-ECO FIX series

Glass t (mm)	L (m)	art.
12 (12)	2,5	A19/0004-012-02.5
	5	A19/0004-012-05.0
	25	A19/0004-012-25.0
12,76 (66.2)	2,5	A19/0004-013-02.5
	5	A19/0004-013-05.0
	25	A19/0004-013-25.0
16,76 (88.2)	2,5	A19/0004-017-02.5
	5	A19/0004-017-05.0
	25	A19/0004-017-25.0
17,52 (88.4)	2,5	A19/0004-018-02.5
	5	A19/0004-018-05.0
	25	A19/0004-018-25.0
20,76 (1010.2)	2,5	A19/0004-021-02.5
	5	A19/0004-021-05.0
	25	A19/0004-021-25.0
21,52 (1010.4)	2,5	A19/0004-022-02.5
	5	A19/0004-022-05.0
	25	A19/0004-022-25.0

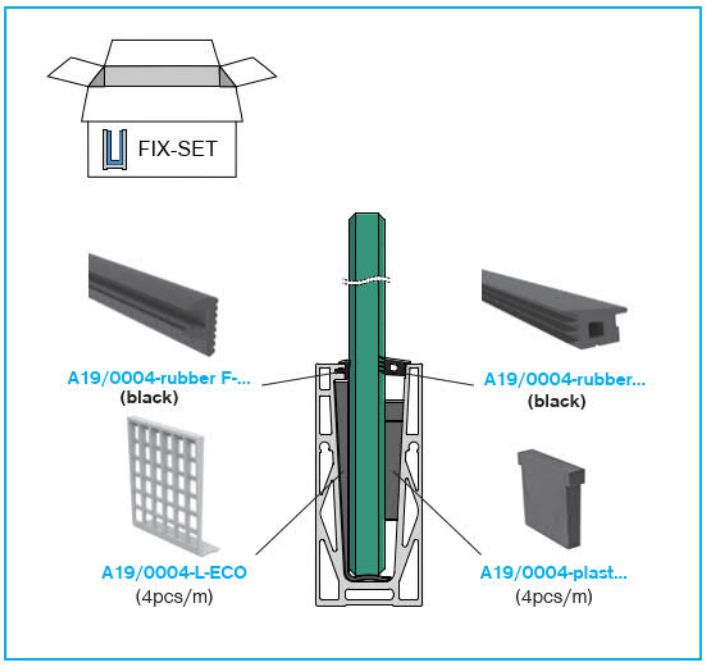

PVC-P - interier

EPDM - exterier

Quality	Finish	art.	L(m)	glass t
Rubber	gray (interier)	A19/0004-F-G-02.5	2,5	12-21,52
		A19/0004-F-G-05.0	5	
		A19/0004-F-G-25.0	25	
	black (exterier)	A19/0004-F-B-02.5	2,5	
		A19/0004-F-B-05.0	5	
		A19/0004-F-B-06.0	6	
		A19/0004-F-B-25.0	25	

PVC-P - interier

EPDM - exterier

Quality	Finish	art.	L(m)	glass t
Rubber	gray (interier)	A19/0004-17-18-G-02.5	2,5	16,76-17,52
		A19/0004-17-18-G-05.0	5	
		A19/0004-17-18-G-25.0	25	
	black (exterier)	A19/0004-rubber12-13-02.5	2,5	12,76-13,52
		A19/0004-rubber12-13-05.0	5	
		A19/0004-rubber12-13-06.0	6	
		A19/0004-rubber12-13-25.0	25	
		A19/0004-rubber17-18-02.5	2,5	16,76-17,52
		A19/0004-rubber17-18-05.0	5	
		A19/0004-rubber17-18-06.0	6	
		A19/0004-rubber17-18-25.0	25	
		A19/0004-rubber21-22-02.5	2,5	20,76-21,52
		A19/0004-rubber21-22-05.0	5	
		A19/0004-rubber21-22-06.0	6	
		A19/0004-rubber21-22-25.0	25	

AL/glass-mont-PRO

art.	use
AL/glass-mont-PRO	FLEX/FIX

new

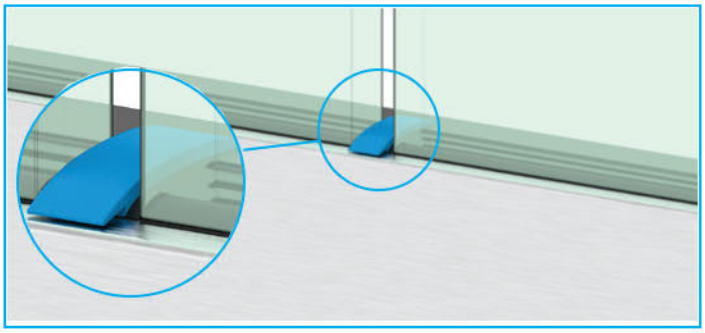

Quality	Finish	art.	L	glass t
Rubber	black	A19/0004-D-B-100	100	12-21,52

AL/0004-ECO

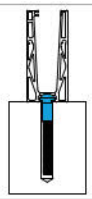

AL ANCHORS 56-57

ANCHORS					
CHEMICAL		5pcs /m	5pcs /m	5pcs /m	1pcs /2,5m
MECHANICAL	5pcs/m 5pcs/m 5pcs/m				

Quality	Finish	art.
PETG	gray	A19/glass-stop

new

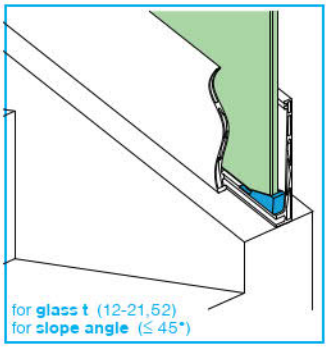

MODEL 0004-LIGHT FLEX series

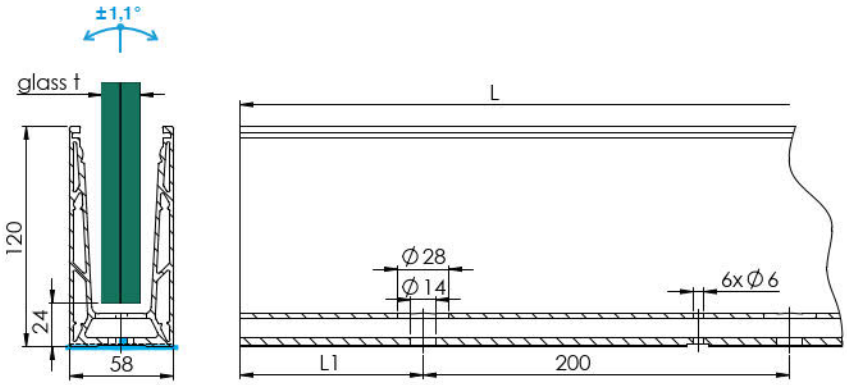

Material	Finish	Effect	art.	L	G/h	L1	glass t		A/0004-LIGHT-Drain	
ANODIZED ALUMINIUM	satin	silver	AL/0004-LIGHT-2500-S-E	2500	0,5kN	50	12,00-17,52	built in drain	✓	±1,1°
			AL/0004-LIGHT-5000-S-E	5000		100				

new

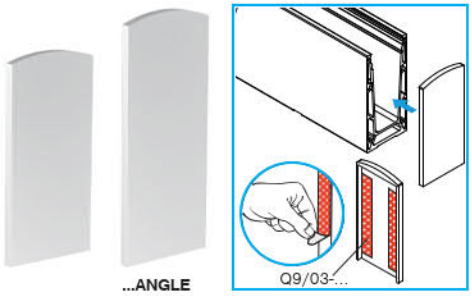

Material	Finish	Effect	art.
ANODIZED ALUMINIUM	satin	silver	AL/0034-004-LIGHT-S-E
			AL/0034-004-LIGHT-S-E-ANG

new

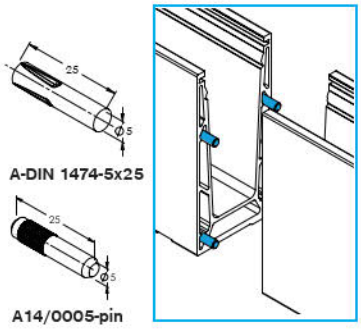

Material	Finish	art.
AISI304	satin	A-DIN 1474-5x25
AISI316		A14/0005-pin

new

new

Material	Finish	art.
AISI304	natural	Q10/ANGLE-0-3-60

new

Material	Finish	art.
AISI304	natural	Q10/60-M16/M10

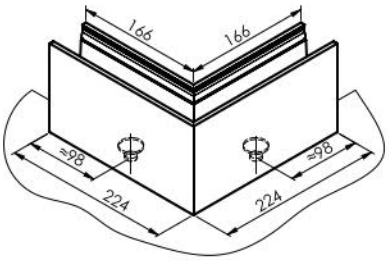

Material	Finish	Effect	art.
ANODIZED ALUMINIUM	satin	silver	AL/0004-LIGHT-S-E-90

new

new

Quality	Finish	art.
PETG	gray	MP/excenter-mount

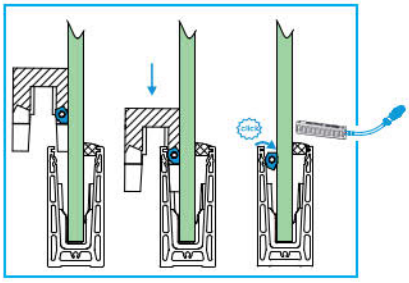

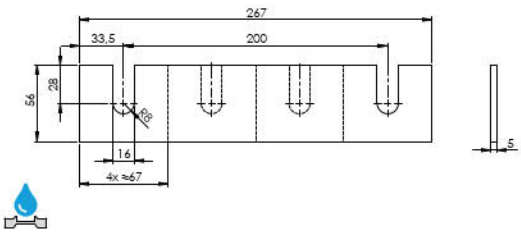

Material	Finish	art.	compatibility	Pcs/m
AISI304	satin	A/0004-LIGHT-Drain	AL/0004-LIGHT-...	2,5

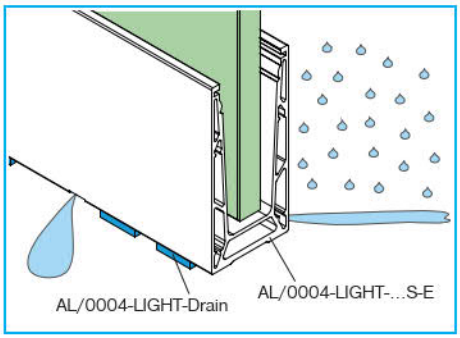

MODEL 0004-LIGHT FLEX series

Glass t (mm)	L (m)	FIX	FLEX ±1,1°
12 (12)	2,5	-	A19/FLEX1-012-SET-02.5
	5		A19/FLEX1-012-SET-05.0
12,76 (6.6.2)	2,5		A19/FLEX1-013-SET-02.5
	5		A19/FLEX1-013-SET-05.0
16,76 (8.8.2)	2,5		A19/FLEX1-017-SET-02.5
	5		A19/FLEX1-017-SET-05.0
17,52 (8.8.4)	2,5		A19/FLEX1-018-SET-02.5
	5		A19/FLEX1-018-SET-05.0

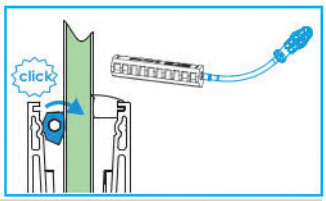

art.	total length	ext. square
Q8/70-275-PRO	275mm	1/4"

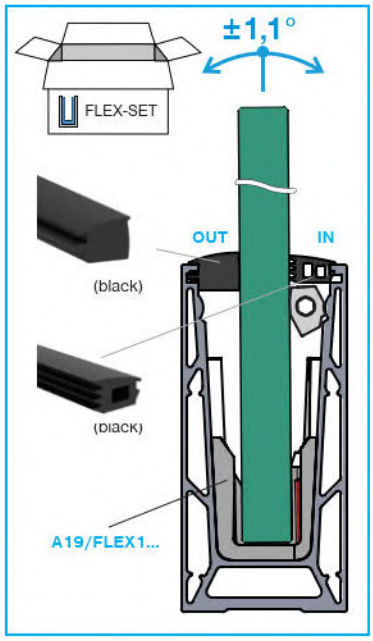

Quality	Finish	art.	L	glass t
Rubber	black	A19/0004-D-B-100	100	12-21,52

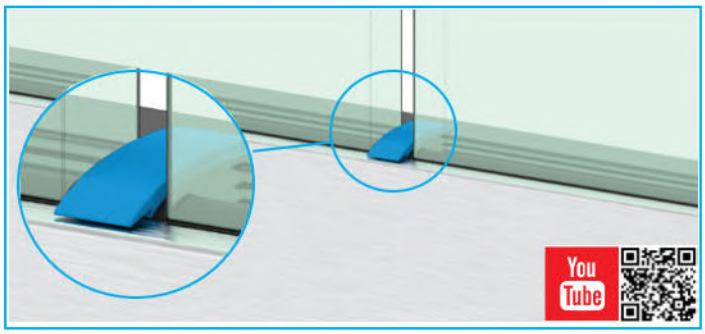

AL/glass-mont-PRO

art.	use
AL/glass-mont-PRO	FLEX/FIX

new

new

Quality	Finish	art.
PETG	gray	A19/glass-stop

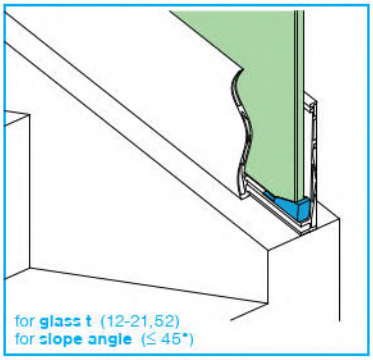

AL/0004-LIGHT	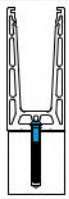						+
		AL ANCHORS 56-57					
ANCHORS	CHEMICAL				5pcs/m	5pcs/m	5pcs/m	1pcs/2,5m
	MECHANICAL	5pcs/m	5pcs/m	5pcs/m			

MODEL 0004-LIGHT CONNECTION PROFILES - TOP MOUNT

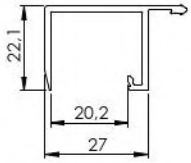

Material	Finish	Effect	art.	L
ANODIZED ALUMINIUM	satin	silver	AL/0051-2500-S-E	2500
			AL/0051-5000-S-E	5000

new

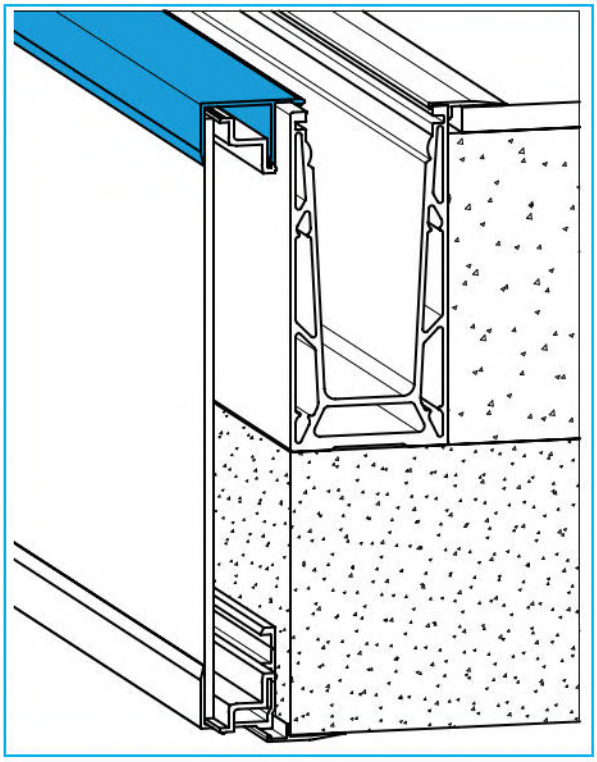

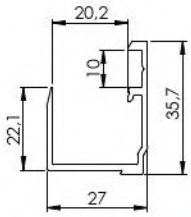

Material	Finish	Effect	art.	L
ANODIZED ALUMINIUM	satin	silver	AL/0052-2500-S-E	2500
			AL/0052-5000-S-E	5000

new

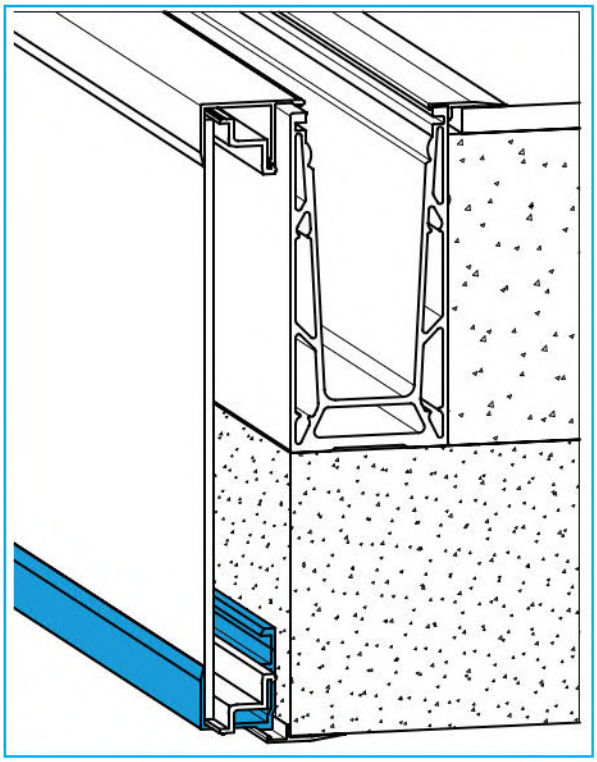

MODEL 0004-LIGHT CONNECTION PROFILES - TOP MOUNT

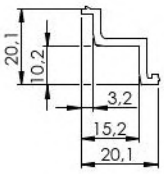

Material	Finish	Effect	art.	L
ANODIZED ALUMINIUM	natur	silver	AL/0053-2500-N-E	2500
			AL/0053-5000-N-E	5000

new

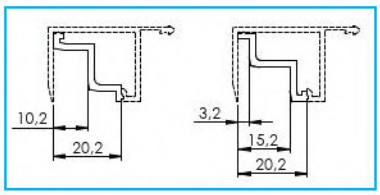

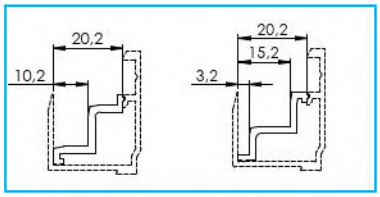

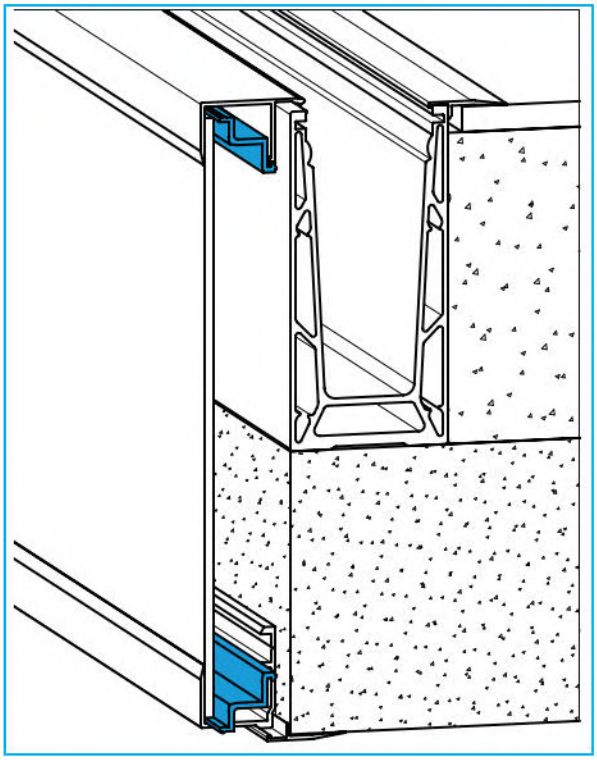

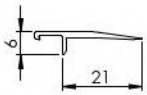

Material	Finish	Effect	art.	L
ANODIZED ALUMINIUM	satin	silver	AL/0054-2500-S-E	2500
			AL/0054-5000-S-E	5000

new

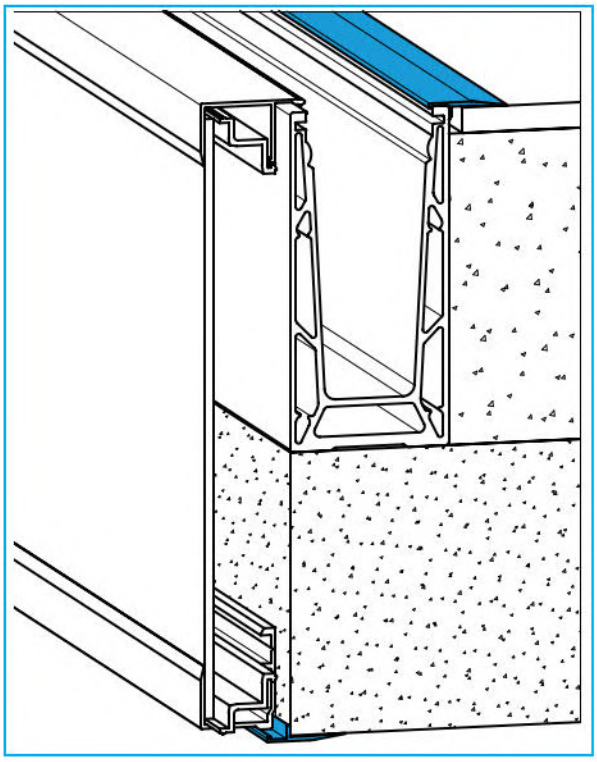

MODEL 0004-UnoXL FLEX series

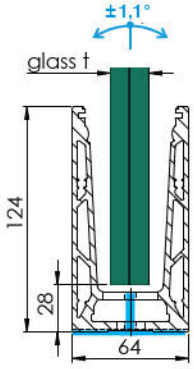

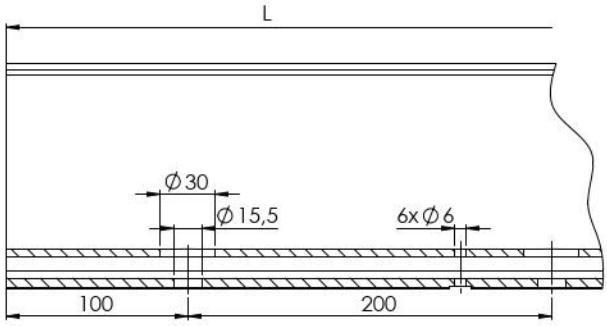

Material	Finish	Effect	art.	L	G/h	L1	glass t		A/0004-UnoXL-Drain		
ANODIZED ALUMINIUM	satin	silver	AL/0004-UnoXL-2500-S-E	2500	1kN	50	16,76-21,52	built in drain	✓	±1,1°	new
			AL/0004-UnoXL-5000-S-E	5000		100					

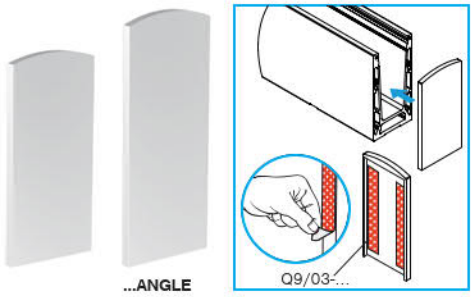

Material	Finish	Effect	art.
ANODIZED ALUMINIUM	satin	silver	AL/0034-004-UnoXL-S-E
			AL/0034-004-UnoXL-S-E-ANGLE

new

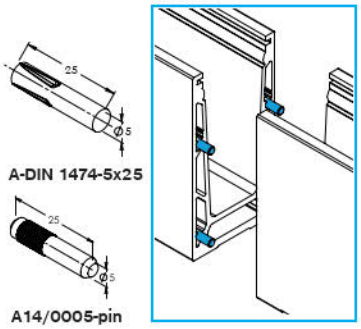

Material	Finish	art.
AISI304	satin	A-DIN 1474-5x25
AISI316		A14/0005-pin

new

new

Material	Finish	art.
AISI304	natural	Q10/ANGLE-0-3-60

new

Material	Finish	art.
AISI304	natural	Q10/60-M16/M10

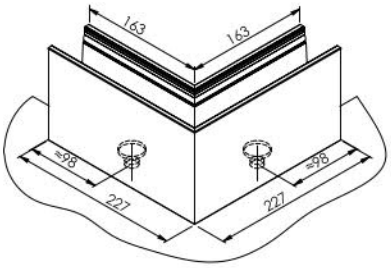

Material	Finish	Effect	art.
ANODIZED ALUMINIUM	satin	silver	AL/0004-UnoXL-S-E-90

new

new

Quality	Finish	art.
PETG	gray	MP/excenter-mount

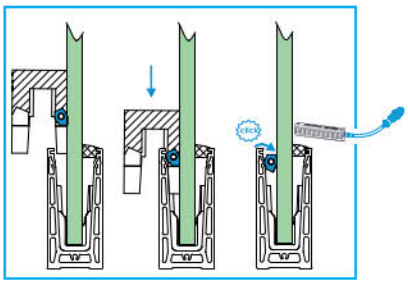

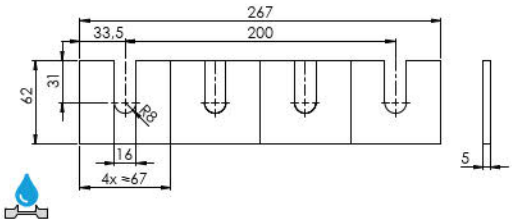

Material	Finish	art.	compatibility	Pcs/m
AISI304	satin	A/0004-UnoXL-Drain	AL/0004-UnoXL-...	2,5

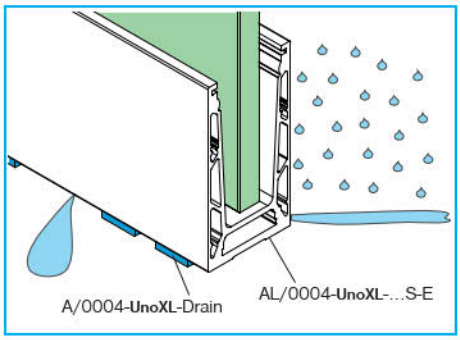

MODEL 0004-UnoXL FLEX series

Glass t (mm)	L (m)	FIX	FLEX ±1,1°
16,76 (8.8.2)	2,5	-	A19/FLEX2-017-SET-02.5
	5		A19/FLEX2-017-SET-05.0
17,52 (8.8.4)	2,5		A19/FLEX2-018-SET-02.5
	5		A19/FLEX2-018-SET-05.0
20,76 (10.10.2)	2,5		A19/FLEX2-021-SET-02.5
	5		A19/FLEX2-021-SET-05.0
21,52 (10.10.4)	2,5		A19/FLEX2-022-SET-02.5
	5		A19/FLEX2-022-SET-05.0

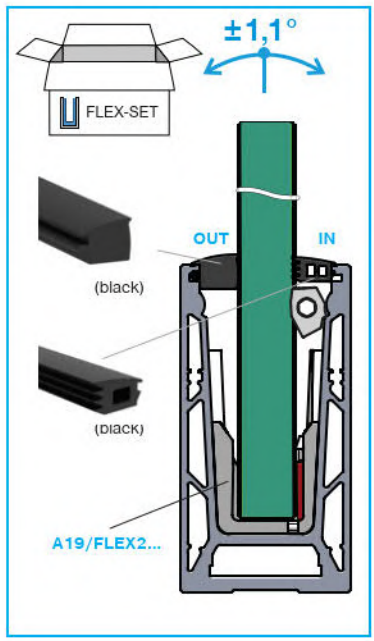

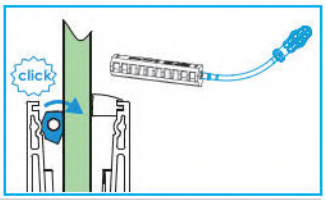

art.	total length	ext. square
Q8/70-275-PRO	275mm	1/4"

Quality	Finish	art.	L	glass t
Rubber	black	A19/0004-D-B-100	100	12-21,52

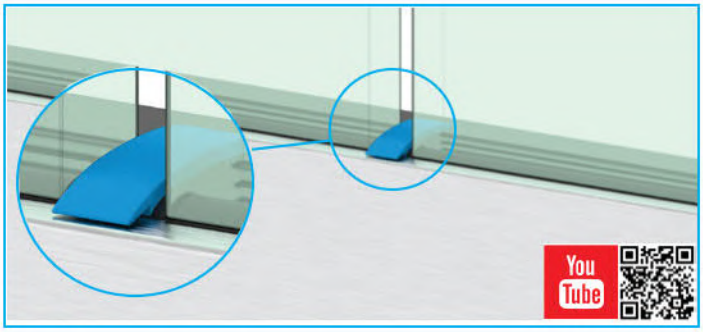

art.	use
AL/glass-mont-PRO	FLEX/FIX

new

new

Quality	Finish	art.
PETG	gray	A19/glass-stop

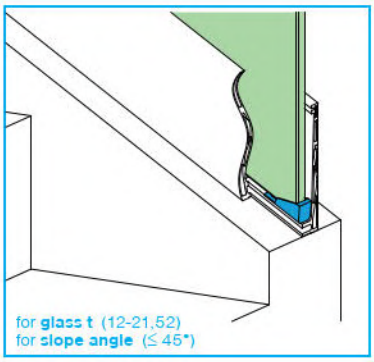

AL/0004-UnoXL								
	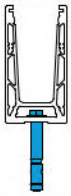							+
		AL ANCHORS → 56-57						
ANCHORS	CHEMICAL				5pcs/m	5pcs/m	5pcs/m	1pcs/2,5m
	MECHANICAL	5pcs/m	5pcs/m	5pcs/m				

MODEL 0004-PRO FLEX/FIX series

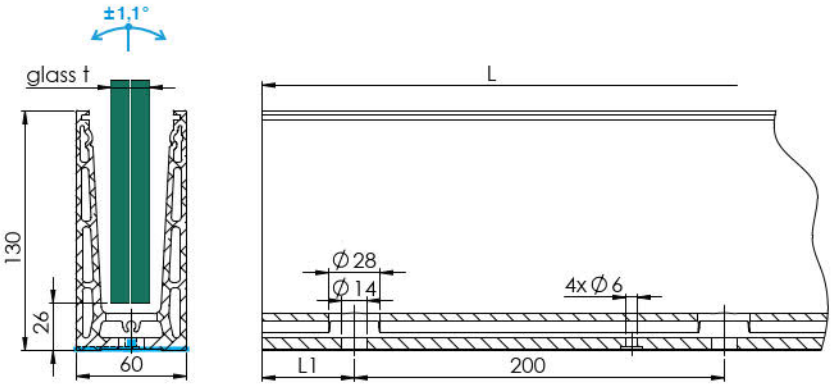

Material	Finish	Effect	art.	L	G/h	L1	glass t		A/0004-PRO-Drain		
ANODIZED ALUMINIUM	satin	silver	AL/0004-PRO-2500-S-E	2500	2kN (3kN*)	50	12,00-21,52	built in drain	✓	±1,1°	new
			AL/0004-PRO-5000-S-E	5000		100					
	natural	silver	AL/0004-PRO-6000-S-E	6000							

* **3kN** - info according to the test protocol 03/23

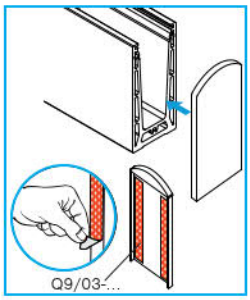

Material	Finish	Effect	art.
ANODIZED ALUMINIUM	satin	silver	AL/0034-004-PRO-S-E
			AL/0034-004-PRO-S-E-ANGLE

new

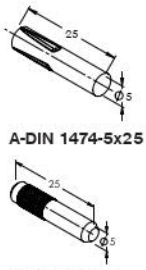

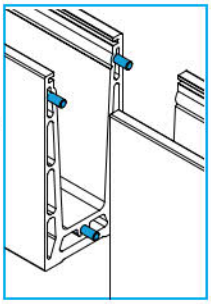

Material	Finish	art.
AISI304	satin	A-DIN 1474-5x25
AISI316		A14/0005-pin

new

new

Material	Finish	art.
AISI304	natural	Q10/ANGLE-0-3-60

new

Material	Finish	art.
AISI304	natural	Q10/60-M16/M10

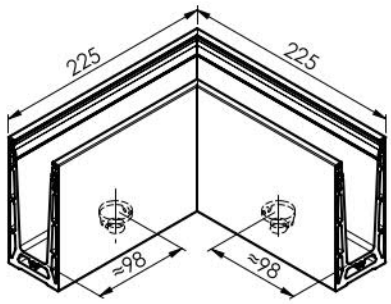

Material	Finish	Effect	art.
ANODIZED ALUMINIUM	satin	silver	AL/0004-PRO-S-E-90

new

new

Quality	Finish	art.
PETG	gray	MP/excenter-mount

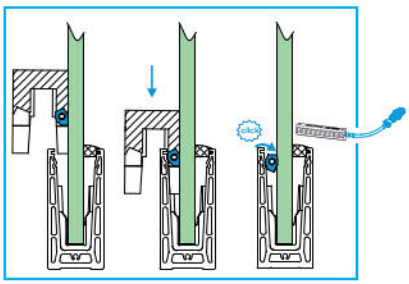

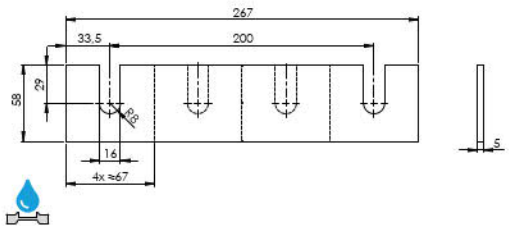

Material	Finish	art.	compatibility	Pcs/m
AISI304	satin	A/0004-PRO-Drain	AL/0004-PRO-...-S-E	2,5

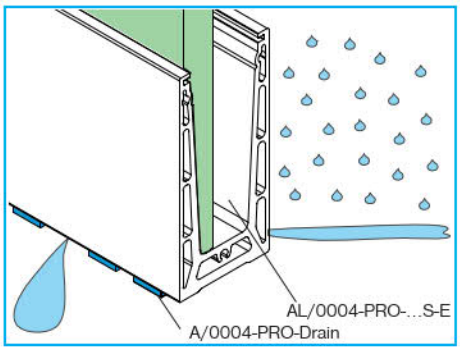

MODEL 0004-PRO FLEX/FIX series

Glass t (mm)	L (m)	FIX	FLEX ±1,1°
12 (12)	2,5	-	A19/FLEX-012-SET-02.5
	5		A19/FLEX-012-SET-05.0
12,76 (6.6.2)	2,5		A19/FLEX-013-SET-02.5
	5		A19/FLEX-013-SET-05.0
16,76 (8.8.2)	2,5		A19/FLEX-017-SET-02.5
	5		A19/FLEX-017-SET-05.0
17,52 (8.8.4)	2,5		A19/FLEX-018-SET-02.5
	5		A19/FLEX-018-SET-05.0
20,76 (10.10.2)	2,5	A19/FIX1-21-SET-02.5	-
	5	A19/FIX1-21-SET-05.0	
21,52 (10.10.4)	2,5	A19/FIX1-22-SET-02.5	
	5	A19/FIX1-22-SET-05.0	

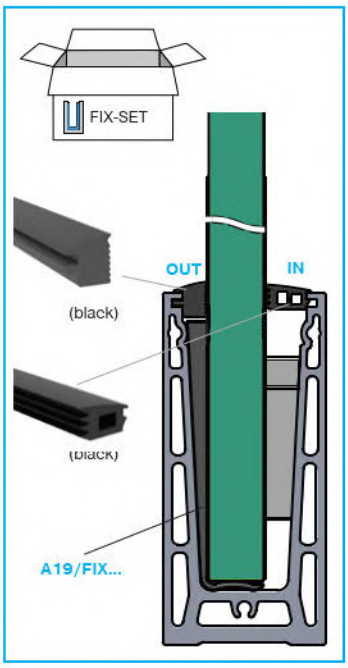

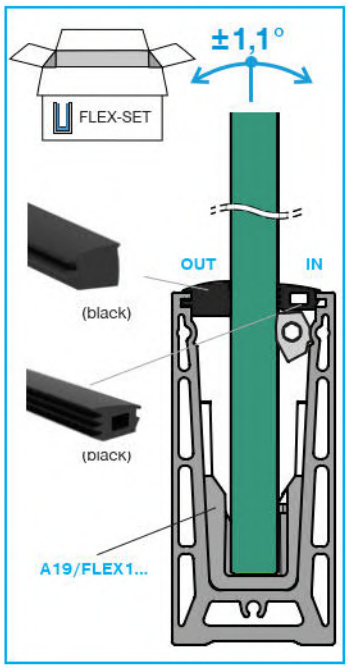

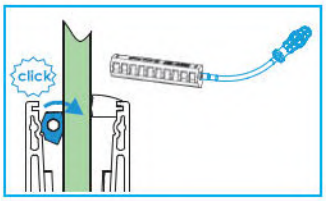

art.	total length	ext. square
Q8/70-275-PRO	275mm	1/4"

Quality	Finish	art.	L	glass t
Rubber	black	A19/0004-D-B-100	100	12-21,52

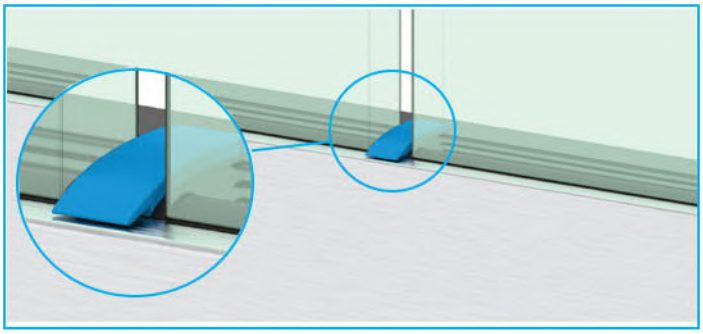

AL/glass-mont-PRO

art.	use
AL/glass-mont-PRO	FLEX/FIX

new

new

Quality	Finish	art.
PETG	gray	A19/glass-stop

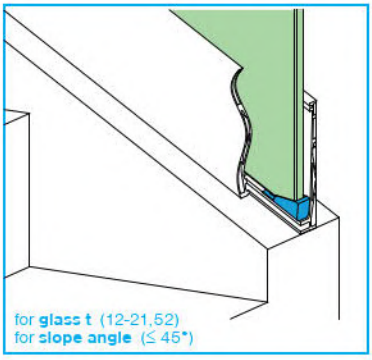

AL/0004-PRO									
	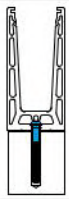						+		
		AL ANCHORS → 56-57							
ANCHORS	CHEMICAL				5pcs/m	5pcs/m	5pcs/m	1pcs/2,5m	
	MECHANICAL	5pcs/m	5pcs/m	5pcs/m					

MODEL NX50-SEG FIX series

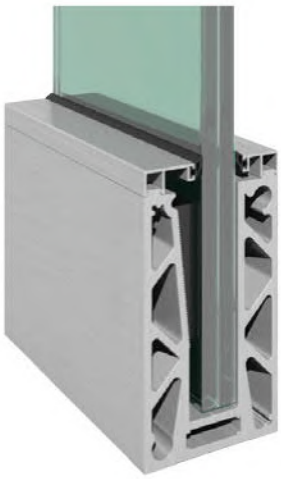

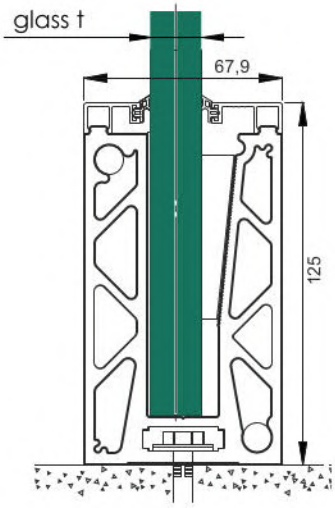

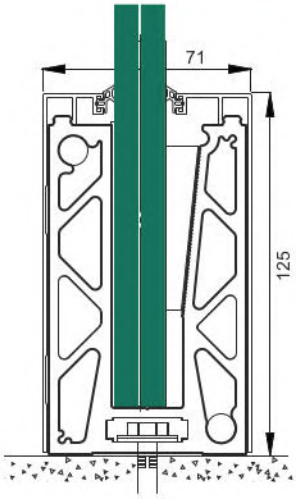

Material	Finish	Effect	art.	L	G/h	glass t	
ANODIZED ALUMINIUM	satin	silver	AL/NX50-SEG150-017-S-E	150	1 kN	16,76-17,52	-
			AL/NX50-SEG300-017-S-E	300			
			AL/NX50-SEG150-021-S-E	150		20,76-21,52	
			AL/NX50-SEG300-021-S-E	300			

new

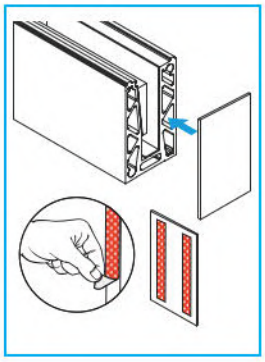

Material	Finish	Effect	art.
ANODIZED ALUMINIUM	satin	silver	AL/NX50-CAP-S-E

new

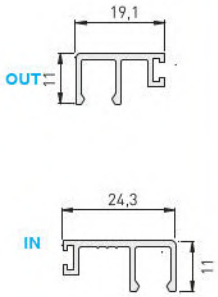

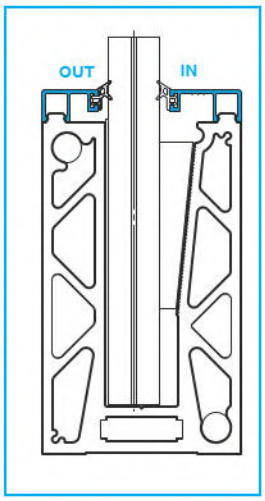

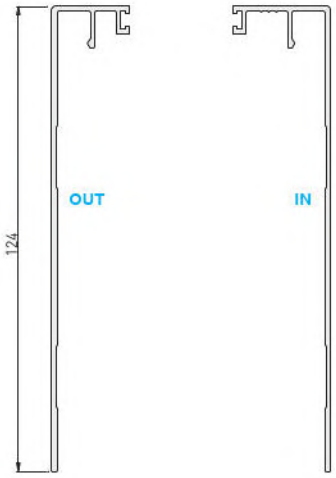

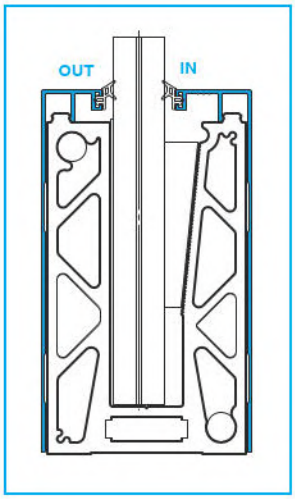

Material	Finish	Effect	art.
ANODIZED ALUMINIUM	satin	silver	AL/NX51-IN-3000-S-E
			AL/NX51-OUT-3000-S-E

new

Material	Finish	Effect	art.
ANODIZED ALUMINIUM	satin	silver	AL/NX52-IN-3000-S-E
			AL/NX52-OUT-3000-S-E

new

MODEL NX50-SEG FIX series

Quality	Finish	art.
PETG	gray	A19/glass-stop

new

AL/glass-mont-PRO

art.	use
AL/glass-mont-PRO	FLEX/FIX

new

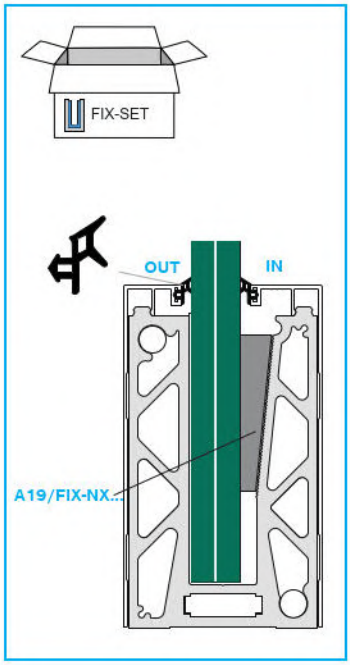

Quality	Finish	art.	L	glass t
Rubber	black	A19/0004-D-B-100	100	12-21,52

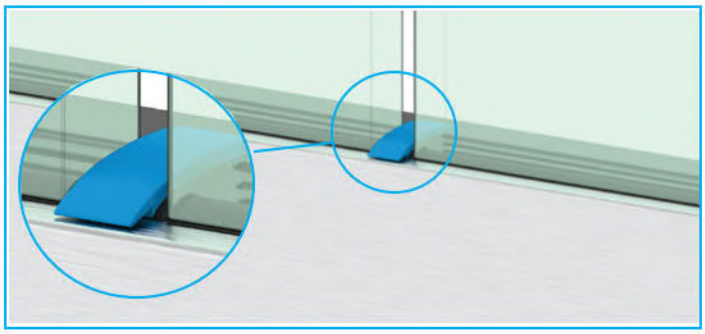

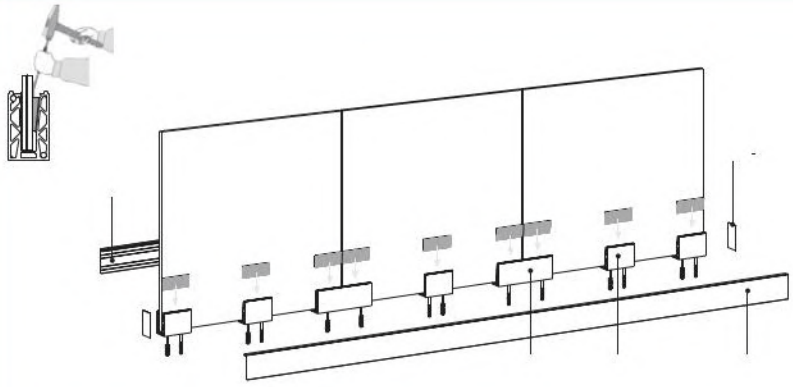

AL/NX50-SEG150-S-E

AL/NX50-SEG300-S-E

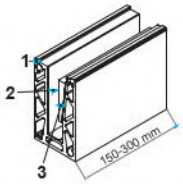

Metarial List
1- Glass support base shoe
2- Spacer
3- Plastic wedge

AL/NX50-SEG...								+
		AL ANCHORS → 56-57						
ANCHORS	CHEMICAL				5pcs/m	5pcs/m	5pcs/m	1pcs/2,5m
	MECHANICAL	5pcs/m	5pcs/m	5pcs/m				

MODEL CL40-SEG FIX series

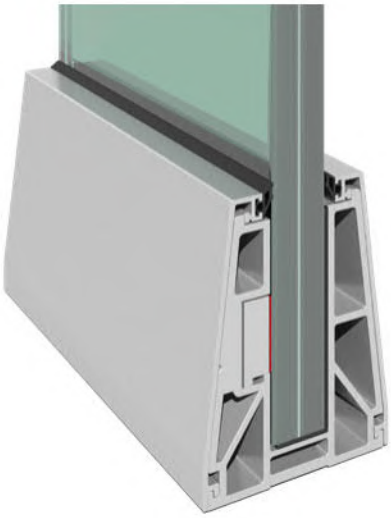

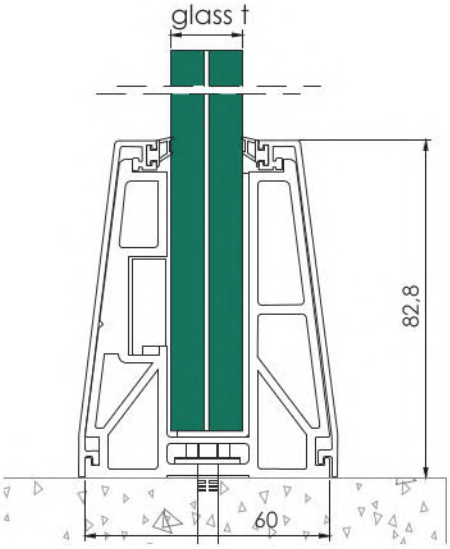

Material	Finish	Effect	art.	L	G/h	glass t			
ANODIZED ALUMINIUM	satin	silver	AL/CL40-SEG150-013-S-E	150	1 kN	12,76-13,52	A19/CL40-1213		-
			AL/CL40-SEG300-013-S-E	300					
			AL/CL40-SEG150-017-S-E	150		16,76-17,52		A19/CL40-1617	
			AL/CL40-SEG300-017-S-E	300					

new

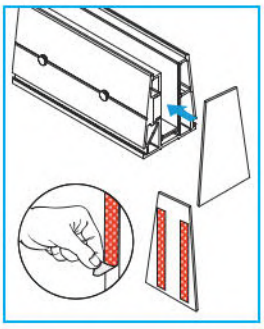

Material	Finish	Effect	art.
ANODIZED ALUMINIUM	satin	silver	AL/CL40-CAP-S-E

new

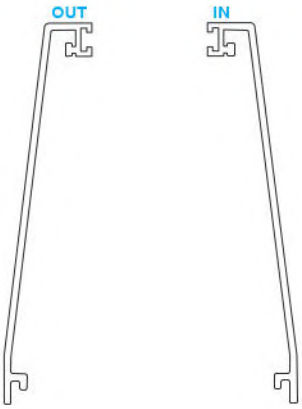

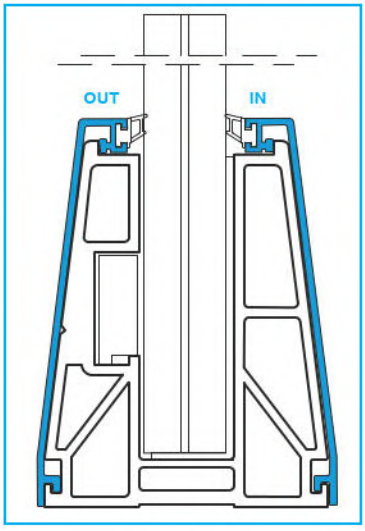

Material	Finish	Effect	art.
ANODIZED ALUMINIUM	satin	silver	AL/CL42-IN-3000-S-E
			AL/CL42-OUT-3000-S-E

new

MODEL CL40-SEG FIX series

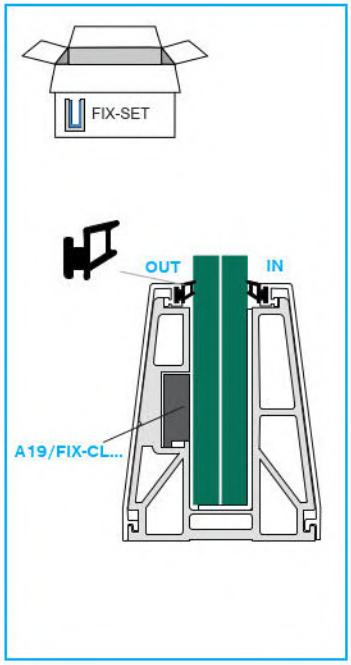

Quality	Finish	art.
PETG	gray	A19/glass-stop

new

AL/glass-mont-PRO

art.	use
AL/glass-mont-PRO	FLEX/FIX

new

Quality	Finish	art.	L	glass t
Rubber	black	A19/0004-D-B-100	100	12-21,52

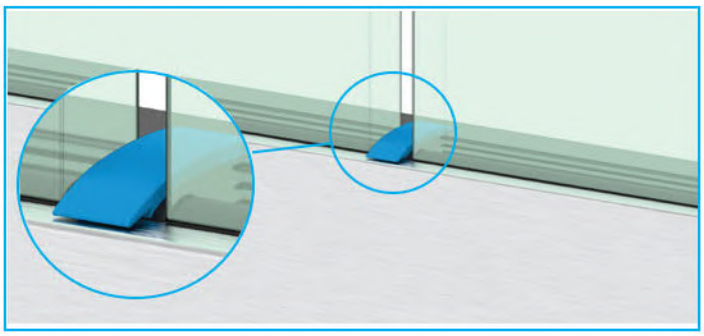

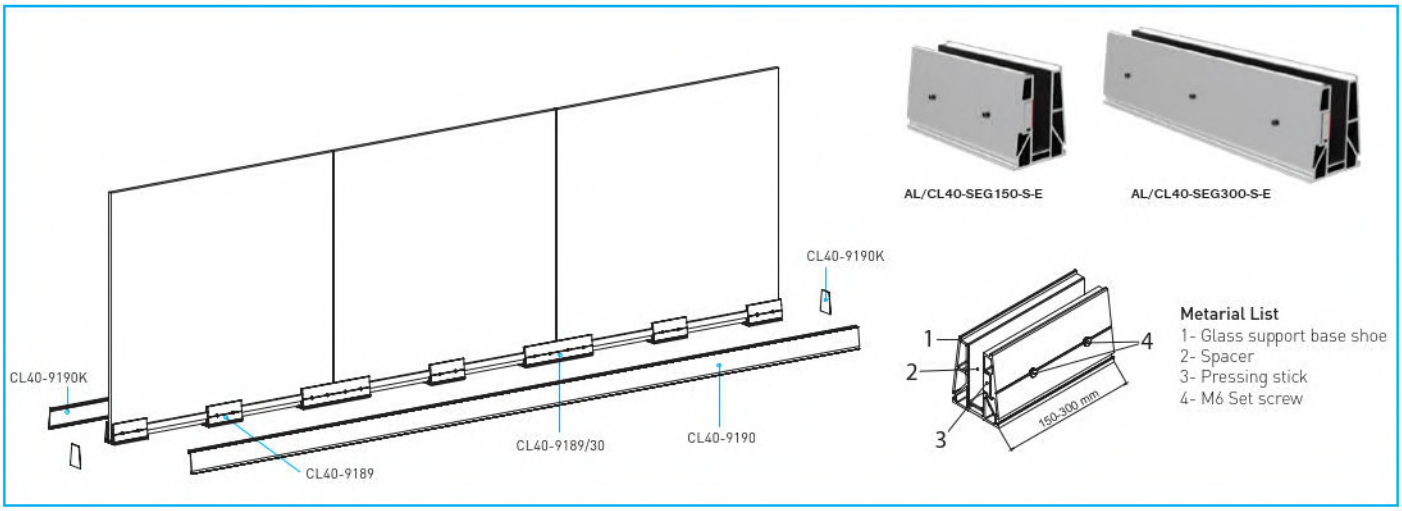

AL/NX50-SEG...									
		AL ANCHORS 56-57							
ANCHORS	CHEMICAL				5pcs/m	5pcs/m	5pcs/m	1pcs/2,5m	
	MECHANICAL	5pcs/m	5pcs/m	5pcs/m					

MODEL 0008 FIX series

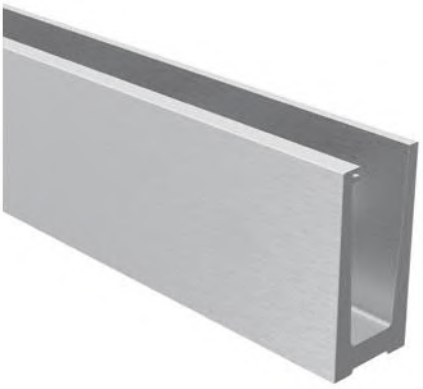

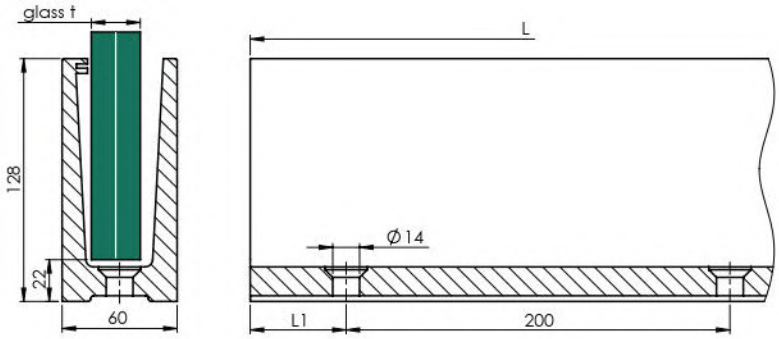

Material	Finish	Effect	art.	L	L1	G/h	glass t
ANODIZED ALUMINIUM	satin	silver	AL/0008-2500-S-E	2500	50	3kN	21,52-25,52
			AL/0008-5000-S-E	5000	100		

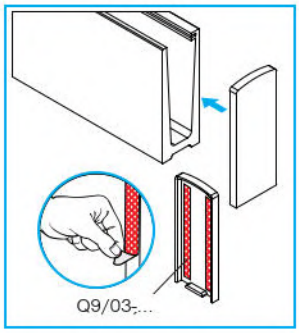

Material	Finish	Effect	art.
ANODIZED ALUMINIUM	satin	silver	AL/0038-004-S-E

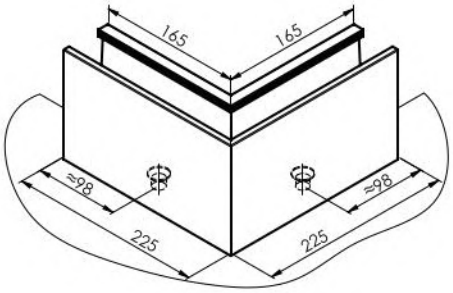

Material	Finish	Effect	art.
ANODIZED ALUMINIUM	satin	silver	AL/0008-S-E-90-IN

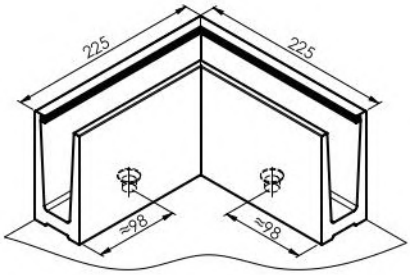

Material	Finish	Effect	art.
ANODIZED ALUMINIUM	satin	silver	AL/0008-S-E-90-OUT

MODEL 0008 FIX series

Glass t (mm)	L (m)	art.
21,52 (1010.4)	2,5	A19/0004-012-02.5
	5	A19/0004-012-05.0
	25	A19/0004-012-25.0
25,52 (1212.4)	2,5	A19/0008-rubber26-02.5
	5	A19/0008-rubber26-05.0
	25	A19/0008-rubber26-25.0

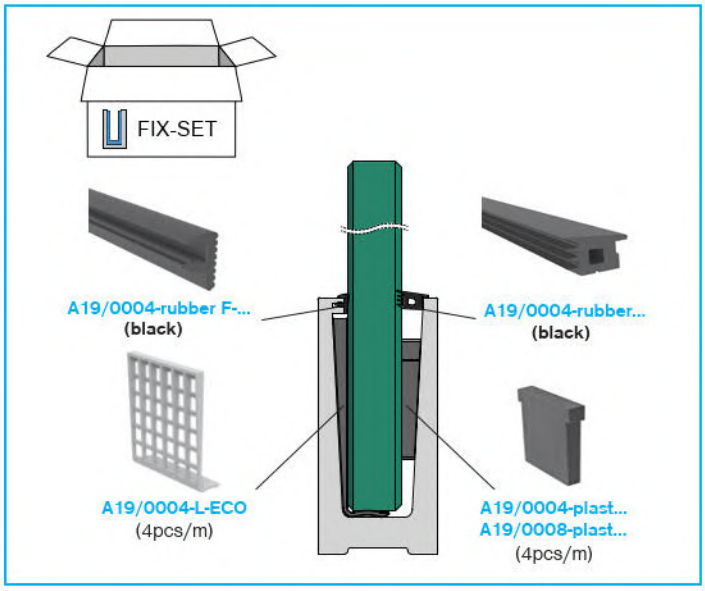

PVC-P - interier

EPDM - exterier

Quality	Finish	art.	L(m)	glass t
Rubber	gray (interier)	A19/0004-F-G-02.5	2,5	12-21,52
		A19/0004-F-G-05.0	5	
		A19/0004-F-G-25.0	25	
	black (exterier)	A19/0004-F-B-02.5	2,5	
		A19/0004-F-B-05.0	5	
		A19/0004-F-B-06.0	6	
		A19/0004-F-B-25.0	25	

PVC-P - interier

EPDM - exterier

Quality	Finish	art.	L(m)	glass t
Rubber	gray (interier)	A19/0004-17-18-G-02.5	2,5	16,76-17,52
		A19/0004-17-18-G-05.0	5	
		A19/0004-17-18-G-25.0	25	
	black (exterier)	A19/0004-rubber12-13-02.5	2,5	12,76-13,52
		A19/0004-rubber12-13-05.0	5	
		A19/0004-rubber12-13-06.0	6	
		A19/0004-rubber12-13-25.0	25	
		A19/0004-rubber17-18-02.5	2,5	16,76-17,52
		A19/0004-rubber17-18-05.0	5	
		A19/0004-rubber17-18-06.0	6	
		A19/0004-rubber17-18-25.0	25	
		A19/0004-rubber21-22-02.5	2,5	20,76-21,52
		A19/0004-rubber21-22-05.0	5	
		A19/0004-rubber21-22-06.0	6	
		A19/0004-rubber21-22-25.0	25	

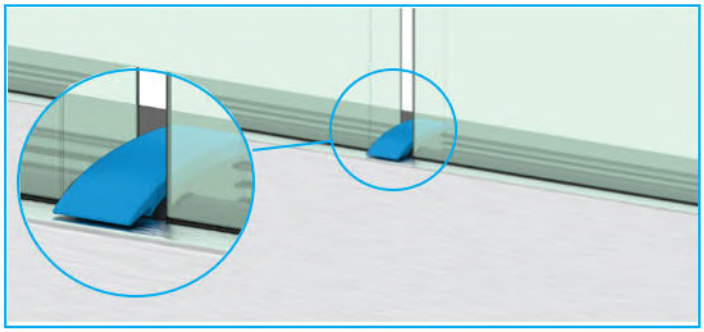

Quality	Finish	art.	L	glass t
Rubber	black	A19/0004-D-B-100	100	12-21,52

3kN AL/0008	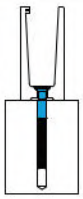	+	
		AL ANCHORS → 56-57	
ANCHORS	CHEMICAL	5pcs/m	1pcs/2,5m

MODEL 0006 FIX series

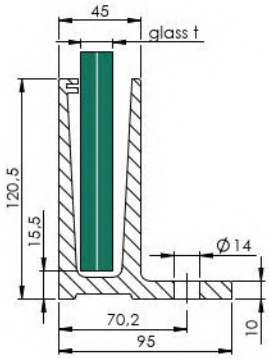

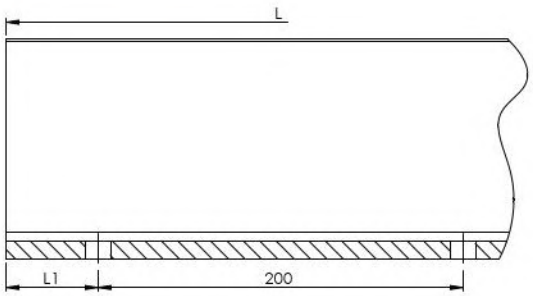

Material	Finish	Effect	art.	L	L1	G/h	glass t	A/0006-Drain
ANODIZED ALUMINIUM	satin	silver	AL/0006-1250-S-E	1250		3kN	12,00-21,52	✓
			AL/0006-2500-S-E	2500	50			
			AL/0006-5000-S-E	5000	100			
			AL/0006-6000-S-E	6000				

top

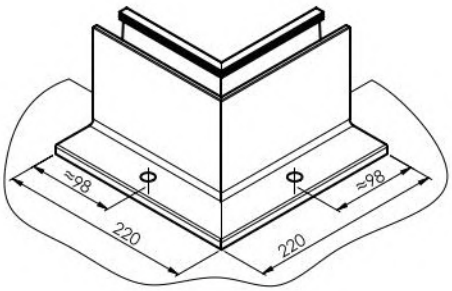

Material	Finish	Effect	art.
ANODIZED ALUMINIUM	satin	silver	AL/0006-S-E-90-IN

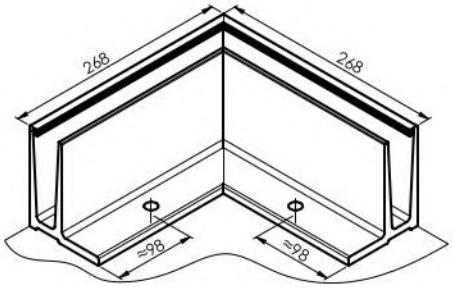

Material	Finish	Effect	art.
ANODIZED ALUMINIUM	satin	silver	AL/0006-S-E-90-IN

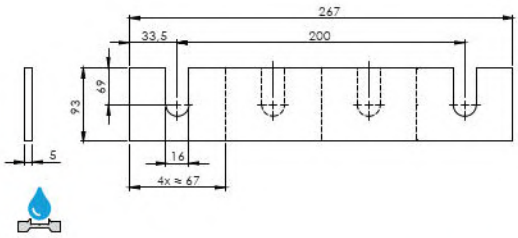

Material	Finish	art.	compatibility	Pcs/m
AISI304	natural	A/0006-Drain	AL/0006-...-S-E	2,5

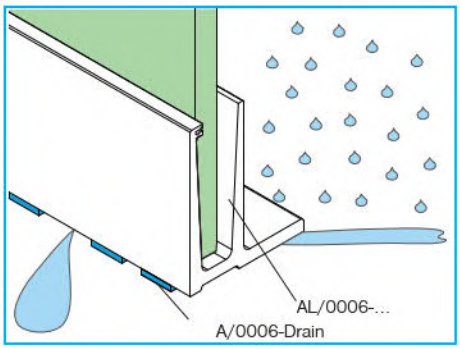

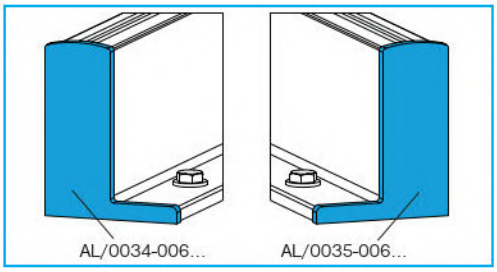

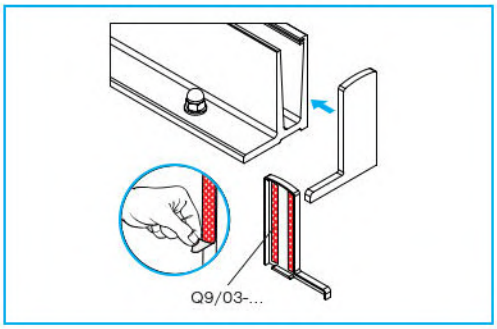

Material	Finish	Effect	art.
ANODIZED ALUMINIUM	satin	silver	AL/0034-006-S-E
			AL/0035-006-S-E

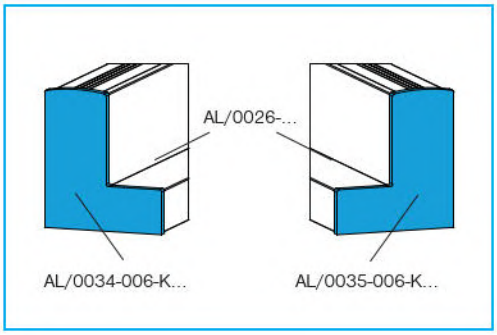

Material	Finish	Effect	art.
ANODIZED ALUMINIUM	satin	silver	AL/0034-006-K-S-E
			AL/0035-006-K-S-E

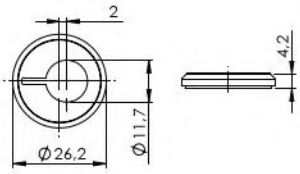

Quality	Finish	art.
PVC	black	A24/0006-003

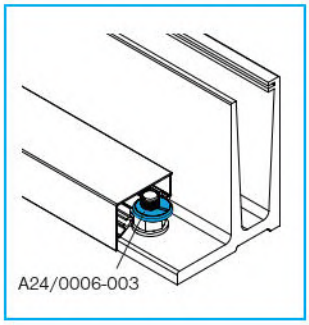

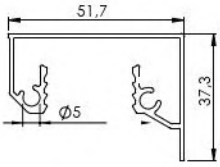

Material	Finish	Effect	art.	L
ANODIZED ALUMINIUM	satin	silver	AL/0026-2500-S-E	2500
			AL/0026-5000-S-E	5000
			AL/0026-6000-S-E	6000

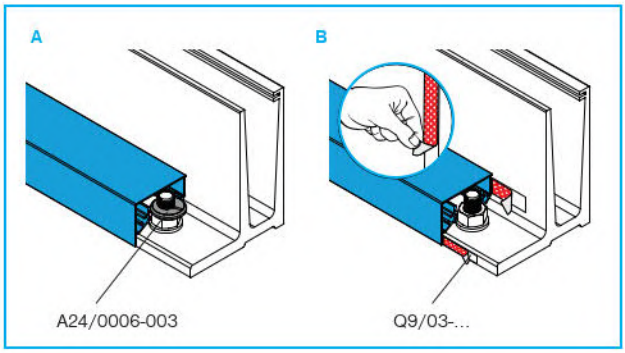

MODEL 0006 FIX series

Glass t (mm)	L (m)	art.
12 (12)	2,5	A19/0004-012-02.5
	5	A19/0004-012-05.0
	25	A19/0004-012-25.0
12,76 (66.2)	2,5	A19/0004-013-02.5
	5	A19/0004-013-05.0
	25	A19/0004-013-25.0
16,76 (88.2)	2,5	A19/0004-017-02.5
	5	A19/0004-017-05.0
	25	A19/0004-017-25.0
17,52 (88.4)	2,5	A19/0004-018-02.5
	5	A19/0004-018-05.0
	25	A19/0004-018-25.0
20,76 (1010.2)	2,5	A19/0004-021-02.5
	5	A19/0004-021-05.0
	25	A19/0004-021-25.0
21,52 (1010.4)	2,5	A19/0004-022-02.5
	5	A19/0004-022-05.0
	25	A19/0004-022-25.0

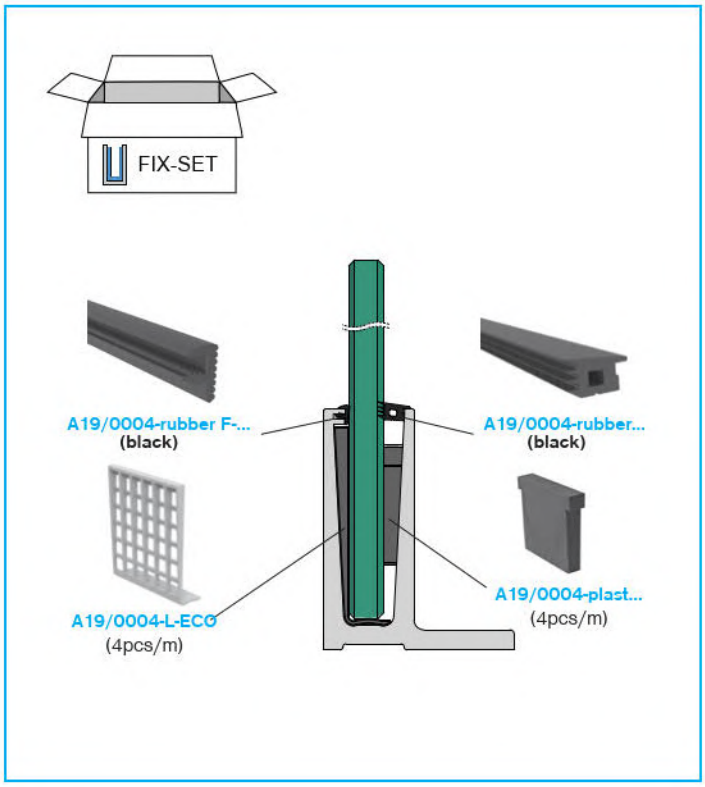

PVC-P - interier

EPDM - exterier

Quality	Finish	art.	L(m)	glass t
Rubber	gray (interier)	A19/0004-F-G-02.5	2,5	12-21,52
		A19/0004-F-G-05.0	5	
		A19/0004-F-G-25.0	25	
	black (exterier)	A19/0004-F-B-02.5	2,5	
		A19/0004-F-B-05.0	5	
		A19/0004-F-B-06.0	6	
		A19/0004-F-B-25.0	25	

PVC-P - interier

EPDM - exterier

Quality	Finish	art.	L(m)	glass t
Rubber	gray (interier)	A19/0004-17-18-G-02.5	2,5	16,76-17,52
		A19/0004-17-18-G-05.0	5	
		A19/0004-17-18-G-25.0	25	
	black (exterier)	A19/0004-rubber12-13-02.5	2,5	12,76-13,52
		A19/0004-rubber12-13-05.0	5	
		A19/0004-rubber12-13-06.0	6	
		A19/0004-rubber12-13-25.0	25	
		A19/0004-rubber17-18-02.5	2,5	16,76-17,52
		A19/0004-rubber17-18-05.0	5	
		A19/0004-rubber17-18-06.0	6	
		A19/0004-rubber17-18-25.0	25	
		A19/0004-rubber21-22-02.5	2,5	20,76-21,52
		A19/0004-rubber21-22-05.0	5	
		A19/0004-rubber21-22-06.0	6	
		A19/0004-rubber21-22-25.0	25	

MODEL 0006 FIX series

AL/0006[1]	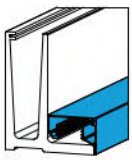	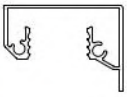					+	
		AL/0026-...	A24/0006-003	AL ANCHORS → 56-57				
ANCHORS	CHEMICAL	✓	2pcs/m	5pcs/m	5pcs/m	1pcs/m		1pcs/2,5m

AL/0006[2]	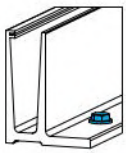					+	
		AL ANCHORS → 56-57						
ANCHORS	CHEMICAL		5pcs/m	5pcs/m	1pcs/m		1pcs/2,5m	
	MECHANICAL	5pcs/m						

Quality	Finish	art.	L	glass t
Rubber	black	A19/0004-D-B-100	100	12-21,52

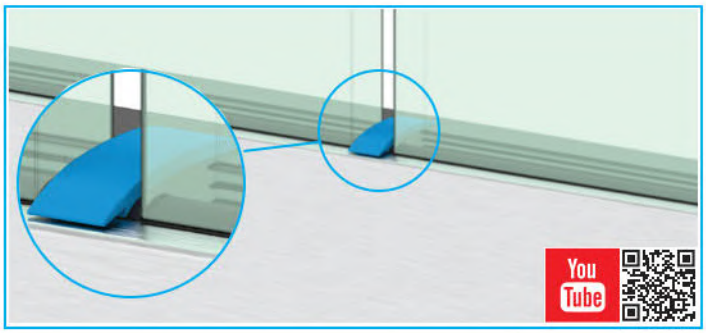

MODEL 0006-ECO FIX series

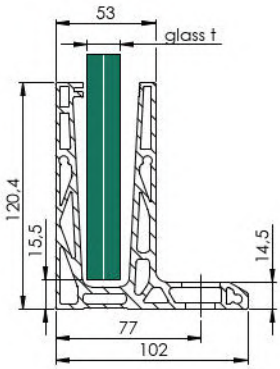

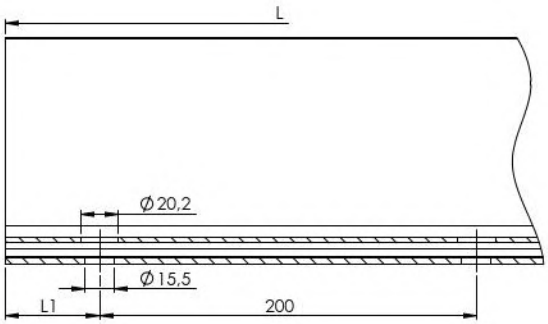

Material	Finish	Effect	art.	L	L1	G/h	glass t	A/0006-ECO-Drain
ANODIZED ALUMINIUM	satin	silver	AL/0006-ECO-2500-S-E	2500	50	1kN	12,00-21,52	✓
			AL/0006-ECO-5000-S-E	5000	100			
			AL/0006-ECO-6000-S-E	6000				
		black	AL/0006-ECO-2500-S-EB	2500	50			
			AL/0006-ECO-5000-S-EB	5000	100			
	natural	silver	AL/0006-ECO-6000-N	6000				

A14/0005-pin

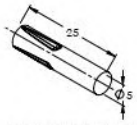

A-DIN 1474-5x25

Material	Finish	art.
AISI304	satin	A-DIN 1474-5x25
AISI316		A14/0005-pin

new

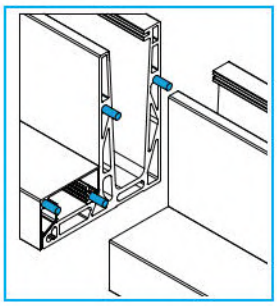

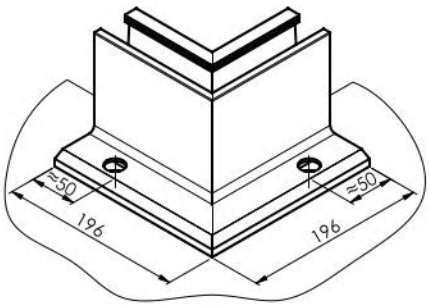

Material	Finish	Effect	art.
ANODIZED ALUMINIUM	satin	silver	AL/0006-ECO-S-E-90-IN
		black	AL/0006-ECO-S-EB-90-IN

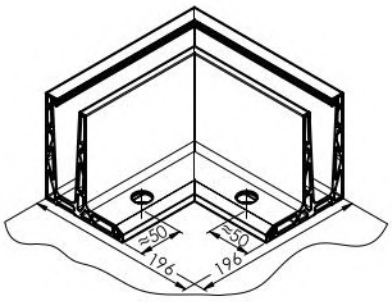

Material	Finish	Effect	art.
ANODIZED ALUMINIUM	satin	silver	AL/0006-ECO-S-E-90-OUT
		black	AL/0006-ECO-S-EB-90-OUT

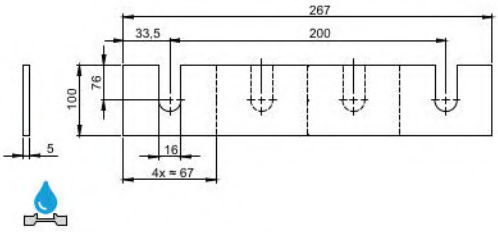

Material	Finish	art.	compatibility	Pcs/m
AISI304	natural	A/0006-ECO-Drain	AL/0006-ECO-...-S-E AL/0006-ECO-...-S-EB	2,5

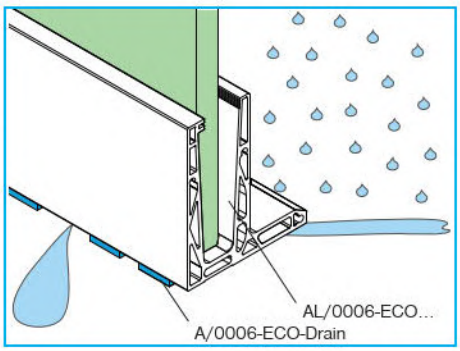

MODEL 0006-ECO FIX series

Material	Finish	Effect	art.
ANODIZED ALUMINIUM	satin	silver	AL/0034-006-ECO-S-E
			AL/0035-006-ECO-S-E
		black	AL/0034-006-ECO-S-EB
			AL/0035-006-ECO-S-EB
AISI304			A/0034-006-ECO
			A/0035-006-ECO

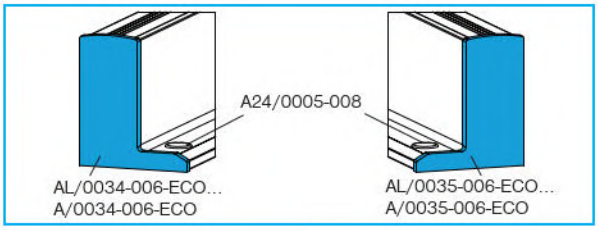

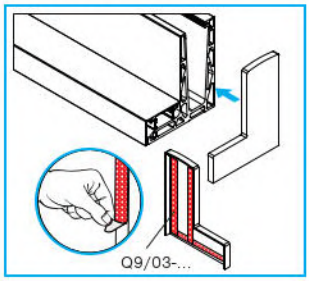

Material	Finish	Effect	art.
ANODIZED ALUMINIUM	satin	silver	AL/0034-006-ECO-K-S-E
			AL/0035-006-ECO-K-S-E
		black	AL/0034-006-ECO-K-S-EB
			AL/0035-006-ECO-K-S-EB
AISI304			A/0034-006-ECO-K
			A/0035-006-ECO-K

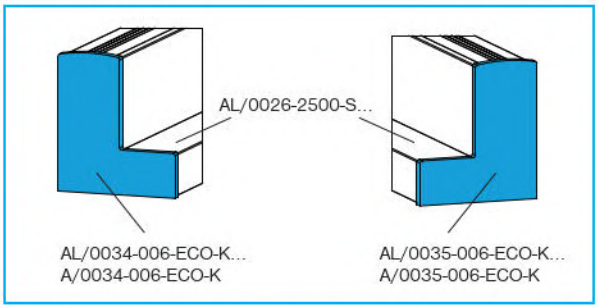

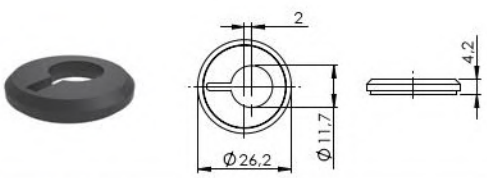

Quality	Finish	art.
PVC	black	A24/0006-003

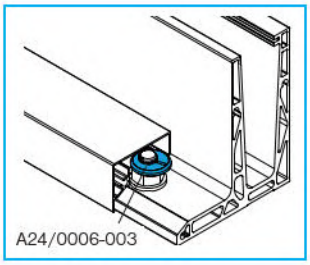

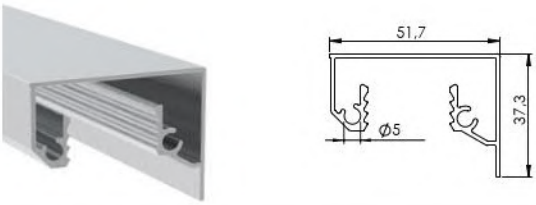

Material	Finish	Effect	art.	L
ANODIZED ALUMINIUM	satin	silver	AL/0026-2500-S-E	2500
			AL/0026-5000-S-E	5000
			AL/0026-6000-S-E	6000
		black	AL/0026-2500-S-EB	2500
			AL/0026-5000-S-EB	5000

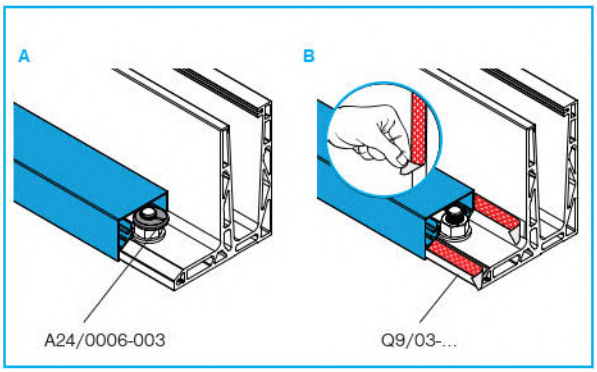

Quality	Finish	art.	D	d
PVC	gray	A24/0005-008	20	25

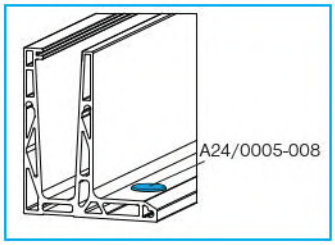

MODEL 0006-ECO FIX series

Glass t (mm)	L (m)	art.
12 (12)	2,5	A19/0004-012-02.5
	5	A19/0004-012-05.0
	25	A19/0004-012-25.0
12,76 (66.2)	2,5	A19/0004-013-02.5
	5	A19/0004-013-05.0
	25	A19/0004-013-25.0
16,76 (88.2)	2,5	A19/0004-017-02.5
	5	A19/0004-017-05.0
	25	A19/0004-017-25.0
17,52 (88.4)	2,5	A19/0004-018-02.5
	5	A19/0004-018-05.0
	25	A19/0004-018-25.0
20,76 (1010.2)	2,5	A19/0004-021-02.5
	5	A19/0004-021-05.0
	25	A19/0004-021-25.0
21,52 (1010.4)	2,5	A19/0004-022-02.5
	5	A19/0004-022-05.0
	25	A19/0004-022-25.0

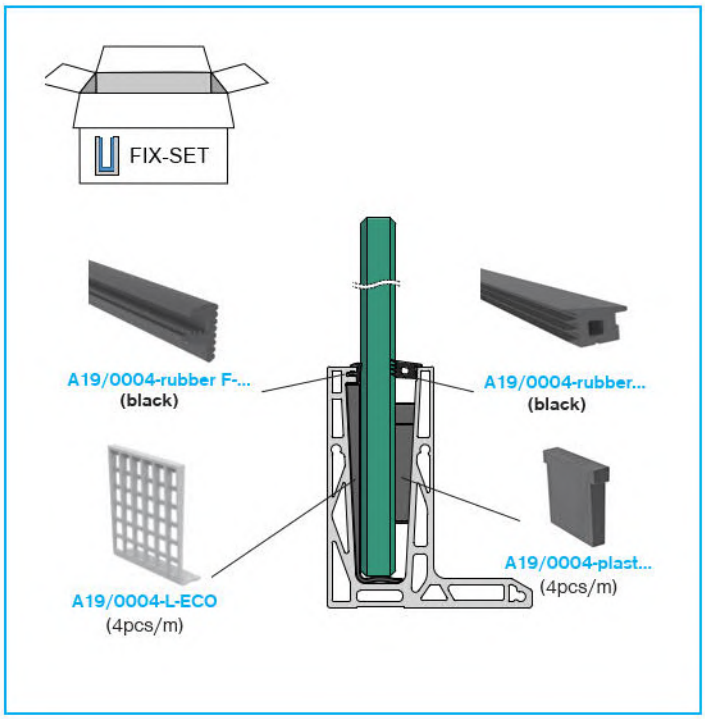

PVC-P - interier

EPDM - exterier

Quality	Finish	art.	L(m)	glass t
Rubber	gray (interier)	A19/0004-F-G-02.5	2,5	12-21,52
		A19/0004-F-G-05.0	5	
		A19/0004-F-G-25.0	25	
	black (exterier)	A19/0004-F-B-02.5	2,5	
		A19/0004-F-B-05.0	5	
		A19/0004-F-B-06.0	6	
		A19/0004-F-B-25.0	25	

PVC-P - interier

EPDM - exterier

Quality	Finish	art.	L(m)	glass t
Rubber	gray (interier)	A19/0004-17-18-G-02.5	2,5	16,76-17,52
		A19/0004-17-18-G-05.0	5	
		A19/0004-17-18-G-25.0	25	
	black (exterier)	A19/0004-rubber12-13-02.5	2,5	12,76-13,52
		A19/0004-rubber12-13-05.0	5	
		A19/0004-rubber12-13-06.0	6	
		A19/0004-rubber12-13-25.0	25	
		A19/0004-rubber17-18-02.5	2,5	16,76-17,52
		A19/0004-rubber17-18-05.0	5	
		A19/0004-rubber17-18-06.0	6	
		A19/0004-rubber17-18-25.0	25	
		A19/0004-rubber21-22-02.5	2,5	20,76-21,52
		A19/0004-rubber21-22-05.0	5	
		A19/0004-rubber21-22-06.0	6	
		A19/0004-rubber21-22-25.0	25	

MODEL 0006-ECO FIX series

AL/0006-ECO[1]							
	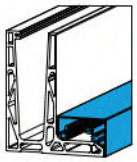	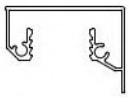				+	
		AL/0026-...	A24/0006-003	AL ANCHORS → 56-57			
ANCHORS	CHEMICAL	✓	2pcs/m	5pcs/m	5pcs/m	1pcs/m	1pcs/2,5m

AL/0006-ECO[2]							
	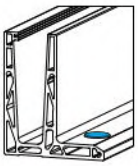					+	
		A24/0005 -008	AL ANCHORS → 56-57				
ANCHORS	CHEMICAL	5pcs/m		5pcs/m	5pcs/m	5pcs/m	1pcs/2,5m
	MECHANICAL	5pcs/m	5pcs/m	5pcs/m	5pcs/m		

AL/0006-ECO[3]							
	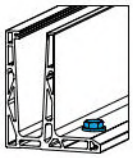					+	
		AL ANCHORS → 56-57					
ANCHORS	CHEMICAL		5pcs/m	5pcs/m	1pcs/m	1pcs/2,5m	
	MECHANICAL	5pcs/m					

Quality	Finish	art.	L	glass t
Rubber	black	A19/0004-D-B-100	100	12-21,52

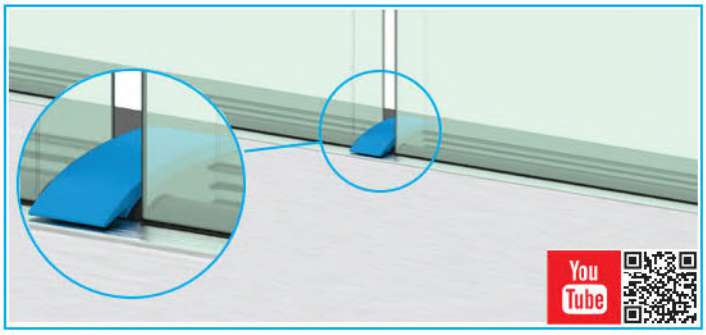

MODEL 0006-UNO FLEX series

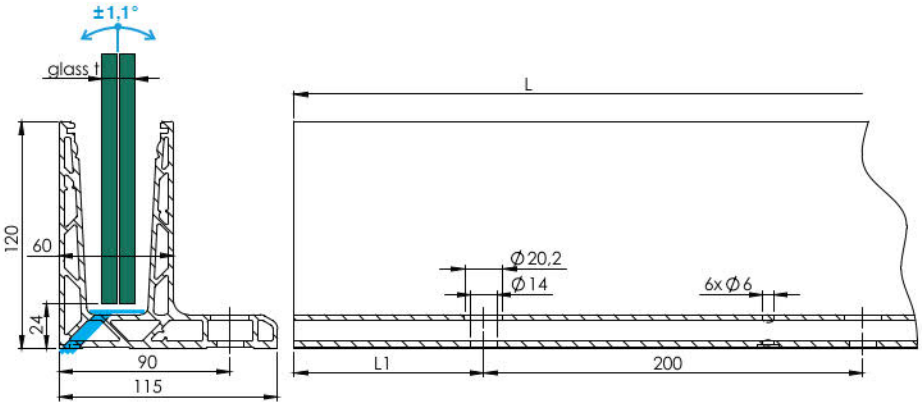

Material	Finish	Effect	art.	L	L1	G/h	glass t		AL/0011-PRO..Drain
ANODIZED ALUMINIUM	satin	silver	AL/0006-UNO-2500-S-E	2500	50	1kN	12,00-17,52	built in drain	✓
			AL/0006-UNO-5000-S-E	5000	100				

new

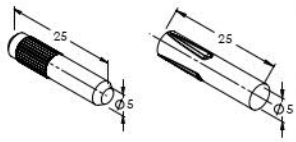

A14/0005-pin A-DIN 1474-5x25

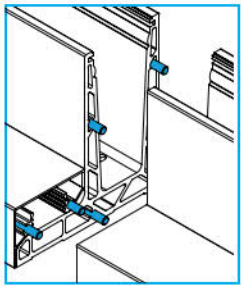

Material	Finish	art.
AISI304	satin	A-DIN 1474-5x25
AISI316		A14/0005-pin

new

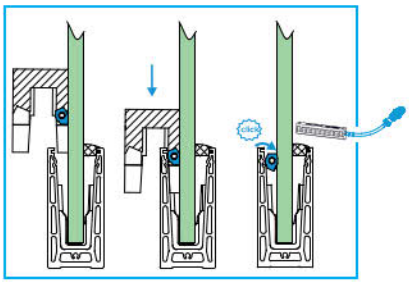

new

Quality	Finish	art.
PETG	gray	MP/excenter-mount

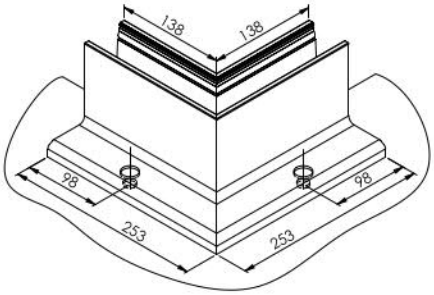

Material	Finish	Effect	art.
ANODIZED ALUMINIUM	satin	silver	AL/0006-UNO-S-E-90-IN

new

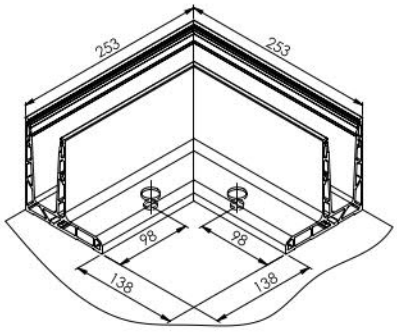

Material	Finish	Effect	art.
ANODIZED ALUMINIUM	satin	silver	AL/0006-UNO-S-E-90-OUT

new

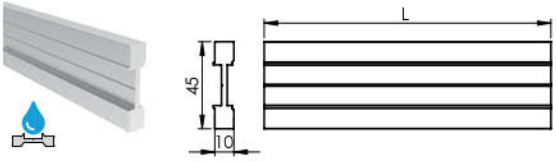

Material	Finish	Effect	art.	L
ANODIZED ALUMINIUM	satin	silver	AL/0011-PRO-S-E-1250-Drain	1250
			AL/0011-PRO-S-E-2500-Drain	2500

new

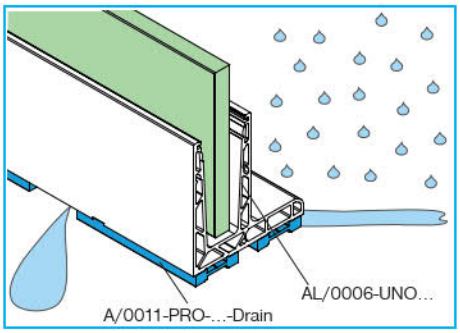

MODEL 0006-UNO FLEX series

Material	Finish	Effect	art.
ANODIZED ALUMINIUM	satin	silver	AL/0034-006-UNO-S-E
			AL/0035-006-UNO-S-E

new

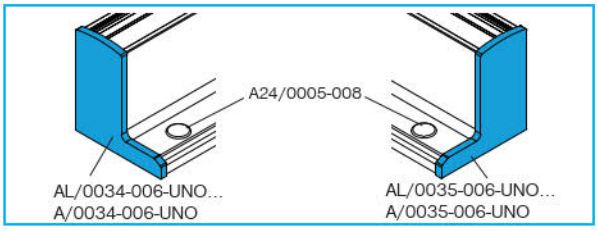

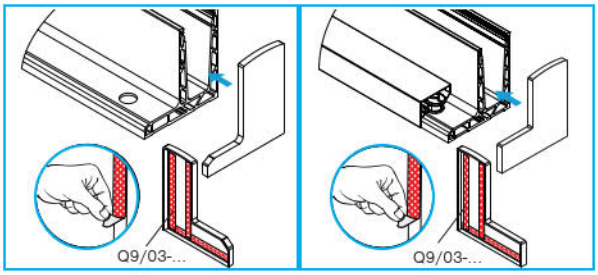

Material	Finish	Effect	art.
ANODIZED ALUMINIUM	satin	silver	AL/0034-006-UNO-K-S-E
			AL/0035-006-UNO-K-S-E

new

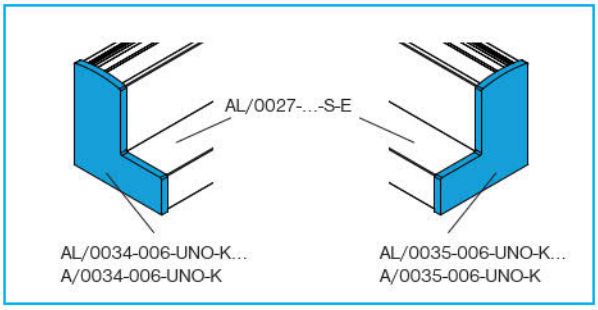

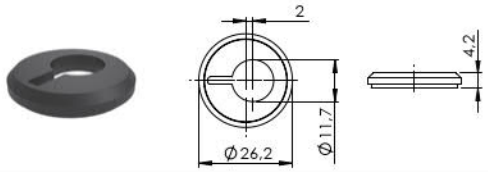

Quality	Finish	art.
PVC	black	A24/0006-003

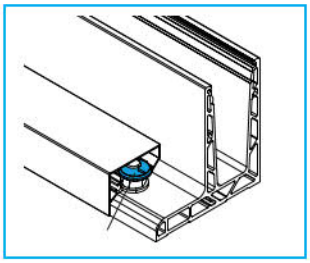

A24/0006-003

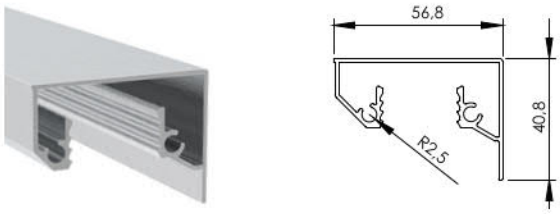

Material	Finish	Effect	art.	L
ANODIZED ALUMINIUM	satin	silver	AL/0027-2500-S-E	2500
			AL/0027-5000-S-E	5000

new

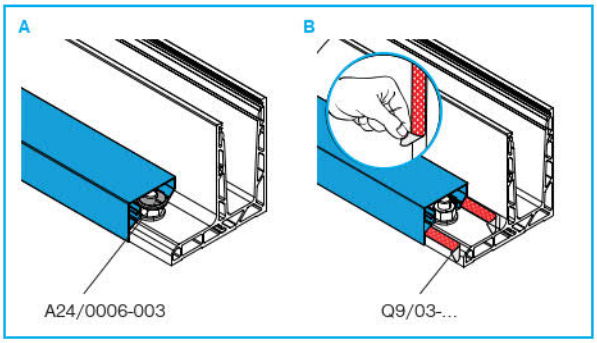

Quality	Finish	art.	D	d
PVC	gray	A24/0005-008	20	25

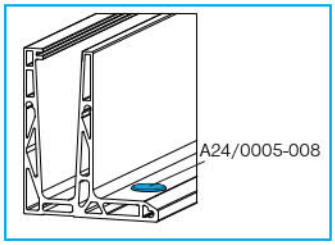

MODEL 0006-UNO FLEX series

Glass t (mm)	L (m)	FIX	FLEX ±1,1°
12 (12)	2,5	-	A19/FLEX1-012-SET-02.5
	5		A19/FLEX1-012-SET-05.0
12,76 (6.6.2)	2,5		A19/FLEX1-013-SET-02.5
	5		A19/FLEX1-013-SET-05.0
16,76 (8.8.2)	2,5		A19/FLEX1-017-SET-02.5
	5		A19/FLEX1-017-SET-05.0
17,52 (8.8.4)	2,5		A19/FLEX1-018-SET-02.5
	5		A19/FLEX1-018-SET-05.0

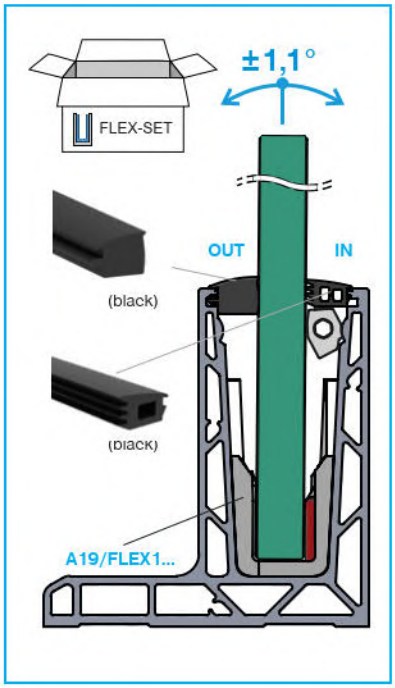

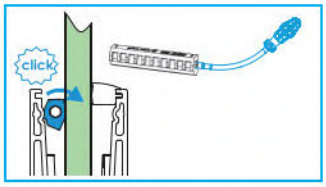

art.	total length	ext. square
Q8/70-275-PRO	275mm	1/4"

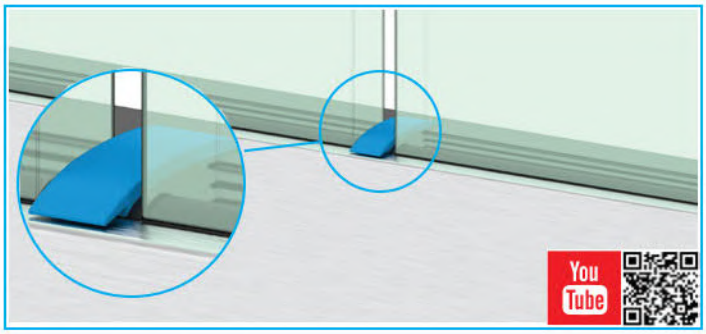

Quality	Finish	art.	L	glass t
Rubber	black	A19/0004-D-B-100	100	12-21,52

AL/glass-mont-PRO

art.	use
AL/glass-mont-PRO	FLEX/FIX

new

MODEL 0006-UNO FLEX series

AL/0006-UNO[1]							
		AL/0027-...	A24/0006-003	AL ANCHORS → 56-57			
ANCHORS	CHEMICAL	✓	2pcs/m	5pcs/m	5pcs/m	1pcs/m	1pcs/2,5m

AL/0006-UNO[2]							
		A24/0005 -008	AL ANCHORS → 56-57				
ANCHORS	CHEMICAL	5pcs/m		5pcs/m	5pcs/m	5pcs/m	1pcs/2,5m
	MECHANICAL	5pcs/m	5pcs/m	5pcs/m	5pcs/m		

AL/0006-UNO[3]						
		AL ANCHORS → 56-57				
ANCHORS	CHEMICAL		5pcs/m	5pcs/m	1pcs/m	1pcs/2,5m
	MECHANICAL	5pcs/m				

MODEL 0006-UNO CONNECTION PROFILES - TOP MOUNT

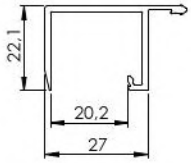

Material	Finish	Effect	art.	L
ANODIZED ALUMINIUM	satin	silver	AL/0051-2500-S-E	2500
			AL/0051-5000-S-E	5000

new

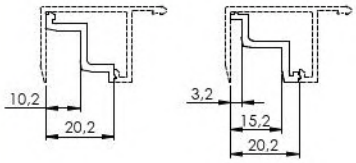

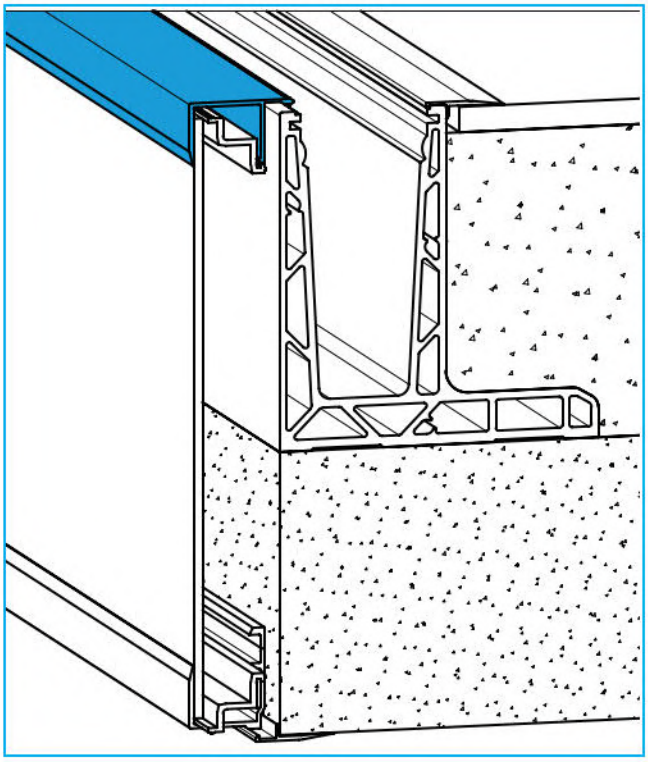

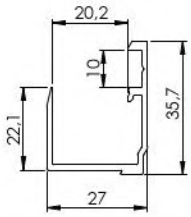

Material	Finish	Effect	art.	L
ANODIZED ALUMINIUM	satin	silver	AL/0052-2500-S-E	2500
			AL/0052-5000-S-E	5000

new

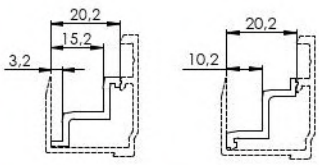

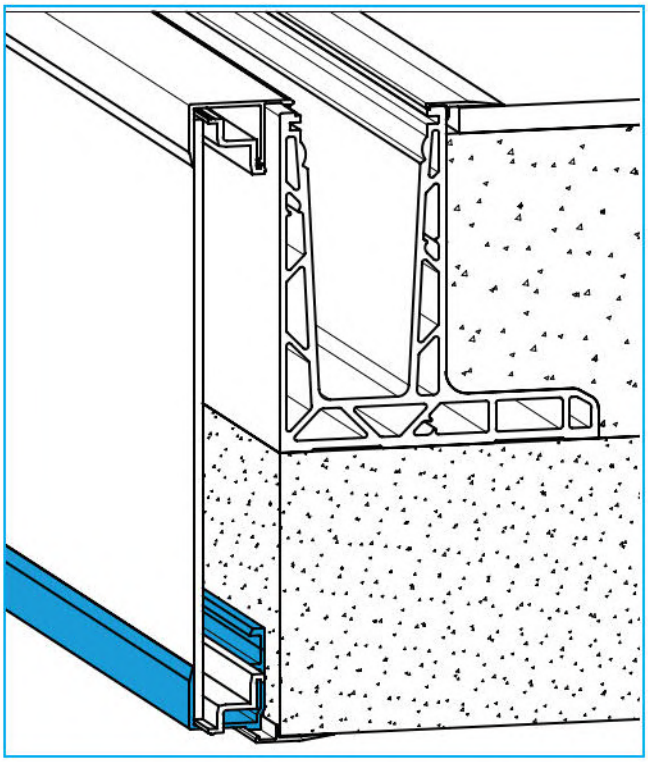

MODEL 0006-UNO CONNECTION PROFILES - TOP MOUNT

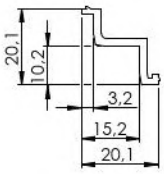

Material	Finish	Effect	art.	L
ANODIZED ALUMINIUM	natur	silver	AL/0053-2500-N-E	2500
			AL/0053-5000-N-E	5000

new

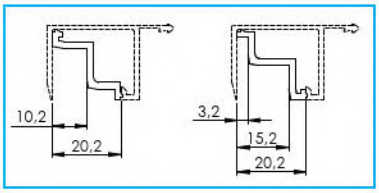

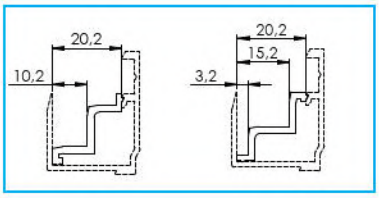

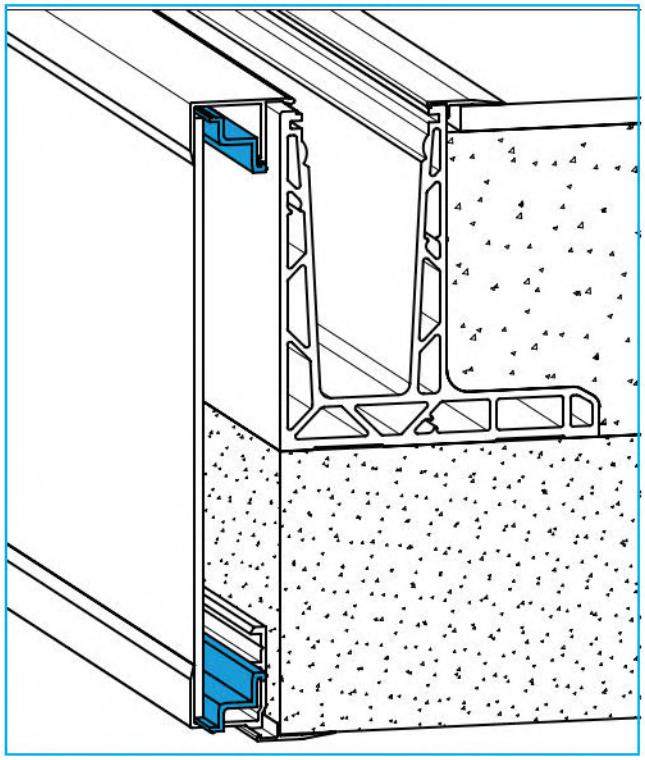

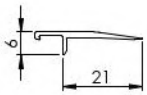

Material	Finish	Effect	art.	L
ANODIZED ALUMINIUM	satin	silver	AL/0054-2500-S-E	2500
			AL/0054-5000-S-E	5000

new

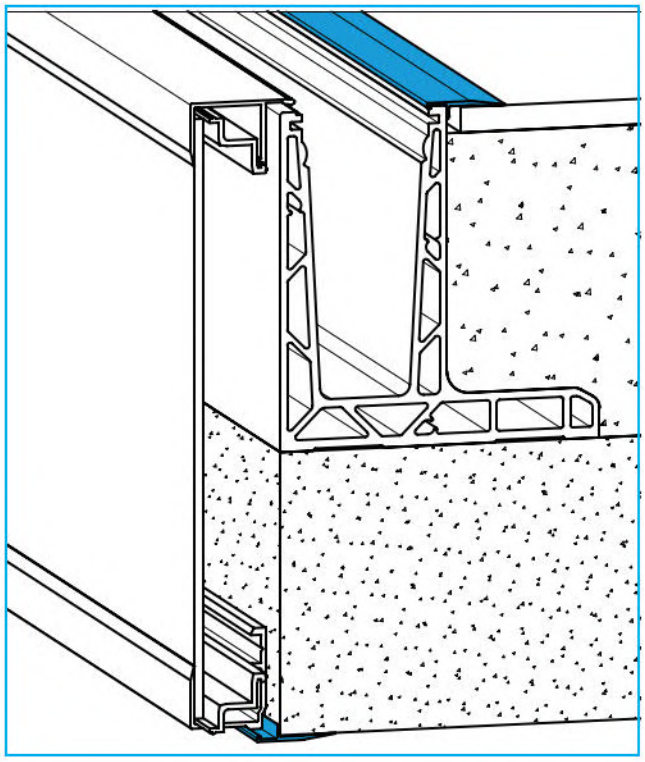

MODEL 0005-UNO FLEX series

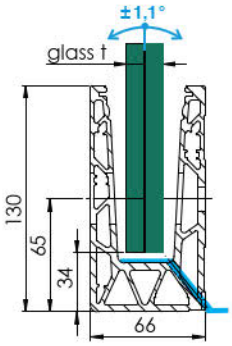

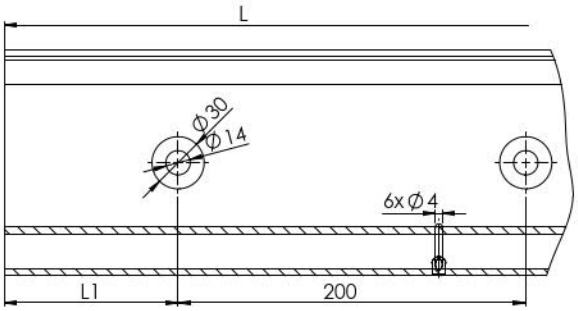

Material	Finish	Effect	art.	L	L1	G/h	glass t	A/0011-PRO-S-E...Drain	built in drain
ANODIZED ALUMINIUM	satin	silver	AL/0005-UNO-2500-S-E	2500	50	1kN	12,00 - 17,52	✓	✓
			AL/0005-UNO-5000-S-E	5000	100				

new

...ANGLE

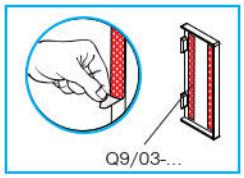

Material	Finish	Effect	art.
ANODIZED ALUMINIUM	satin	silver	AL/0034-005-UNO-S-E
		silver	AL/0034-005-UNO-S-E-ANGLE

new

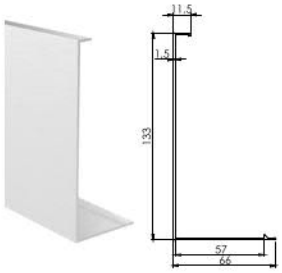

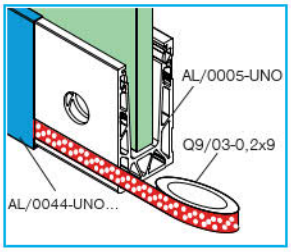

Material	Finish	Effect	art.	L	Q9/03...
ANODIZED ALUMINIUM	satin	silver	AL/0047-2500-S-E	2500	✓
			AL/0047-5000-S-E	5000	

new

A24/0005-009

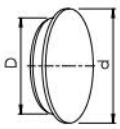

Material	Finish	art.	D	d
PVC	gray	A24/0005-009	30	35

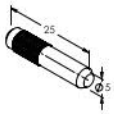

A14/0005-pin

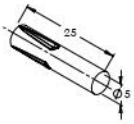

A-DIN 1474-5x25

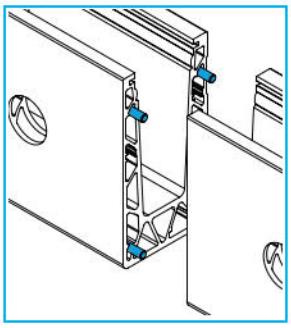

Material	Finish	art.
AISI304	satin	A-DIN 1474-5x25
AISI316		A14/0005-pin

new

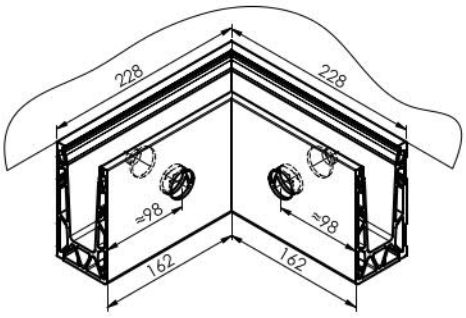

Material	Finish	Effect	art.
ANODIZED ALUMINIUM	satin	silver	AL/0005-UNO-S-E-90-IN

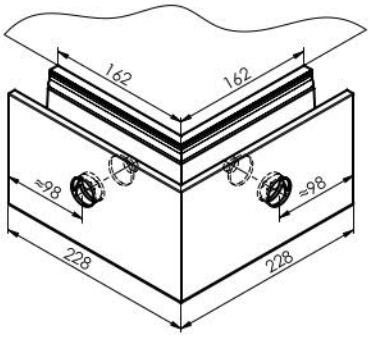

Material	Finish	Effect	art.
ANODIZED ALUMINIUM	satin	silver	AL/0005-UNO-S-E-90-OUT

MODEL 0005-UNO FLEX series

Glass t (mm)	L (m)	FIX	FLEX ±1,1°
12 (12)	2,5	-	A19/FLEX1-012-SET-02.5
	5		A19/FLEX1-012-SET-05.0
12,76 (6.6.2)	2,5		A19/FLEX1-013-SET-02.5
	5		A19/FLEX1-013-SET-05.0
16,76 (8.8.2)	2,5		A19/FLEX1-017-SET-02.5
	5		A19/FLEX1-017-SET-05.0
17,52 (8.8.4)	2,5		A19/FLEX1-018-SET-02.5
	5		A19/FLEX1-018-SET-05.0

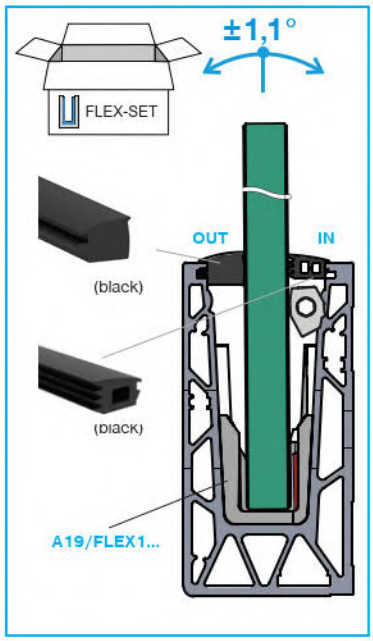

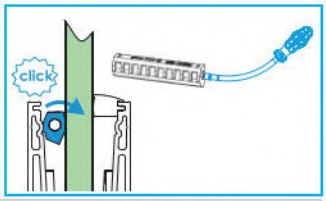

art.	total length	ext. square
Q8/70-275-PRO	275mm	1/4"

AL/glass-mont-PRO

art.	use
AL/glass-mont-PRO	FLEX/FIX

new

Quality	Finish	art.
PETG	gray	A19/glass-stop

new

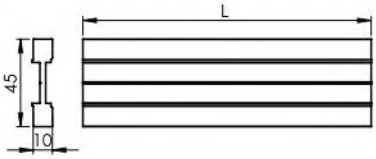

Material	Finish	Effect	art.	L
ANODIZED ALUMINIUM	satin	silver	AL/0011-PRO-S-E-1250-Drain	1250
			AL/0011-PRO-S-E-2500-Drain	2500

new

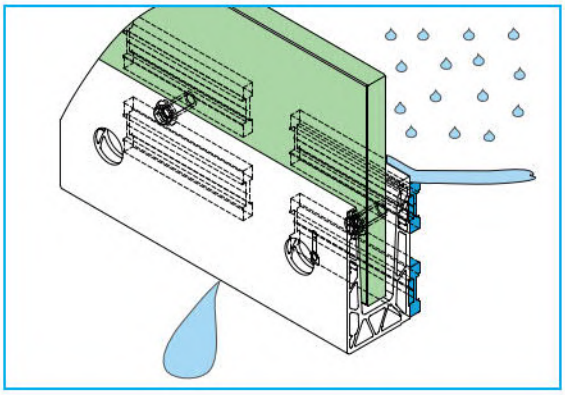

AL/0005-UNO				
	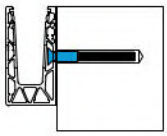			
		AL ANCHORS → 56-57		
ANCHORS	CHEMICAL		5pcs/m	1pcs/2,5m
	MECHANICAL	5pcs/m		

Quality	Finish	art.	L	glass t
Rubber	black	A19/0004-D-B-100	100	12-21,52

MODEL 0005-D FIX series

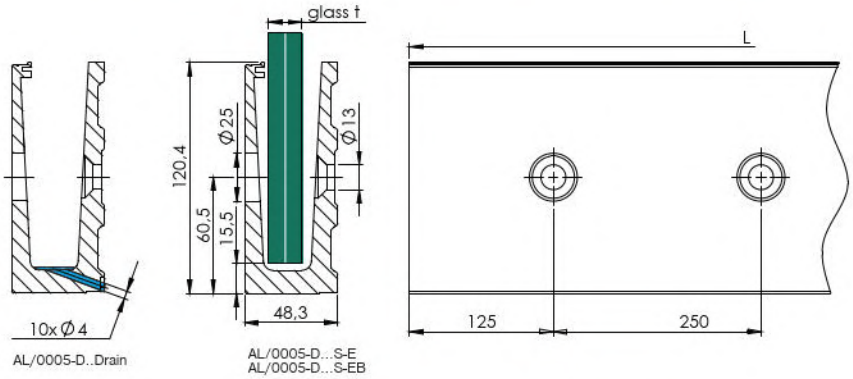

Material	Finish	Effect	art.	L	L1	G/h	glass t	A/0005-S-E...Drain	built in drain
ANODIZED ALUMINIUM	satin	silver	AL/0005-D-1250-S-E	1250	125	1kN	12,00 - 21,52	✓	-
			AL/0005-D-2500-S-E	2500					
			AL/0005-D-5000-S-E	5000					
			AL/0005-D-5000-S-E-Drain						✓
			AL/0005-D-6000-S-E	6000					
		black	AL/0005-D-2500-S-EB	2500					-
			AL/0005-D-5000-S-EB	5000					

...ANGLE

Material	Finish	Effect	art.
ANODIZED ALUMINIUM	satin	silver	AL/0034-005-D-S-E
		black	AL/0034-005-D-S-EB
		silver	AL/0034-005-D-S-E-ANGLE

new

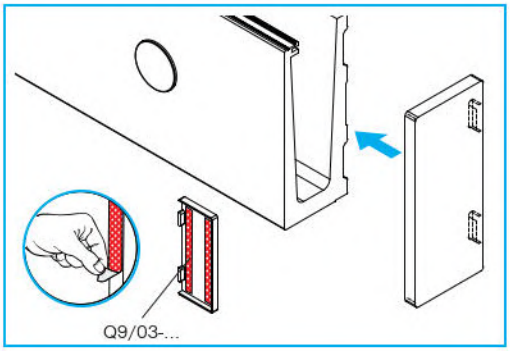

A24/0005-007 AL/0005-007

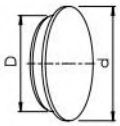

Material	Finish	art.	D	d
ANODIZED ALUMINIUM	satin	AL/0005-007	25	30
PVC	gray	A24/0005-007		

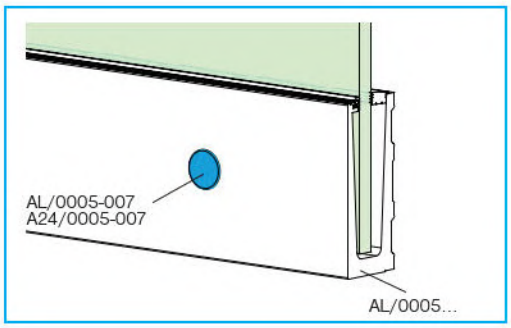

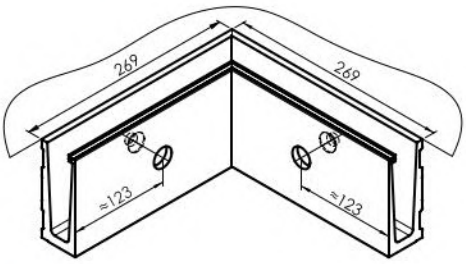

Material	Finish	Effect	art.
ANODIZED ALUMINIUM	satin	silver	AL/0005-D-S-E-90-IN
		black	AL/0005-D-S-EB-90-IN

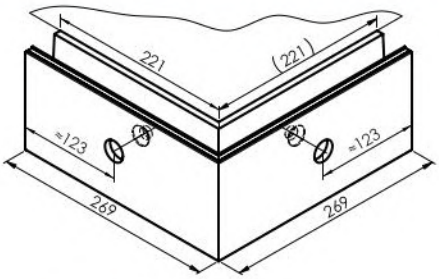

Material	Finish	Effect	art.
ANODIZED ALUMINIUM	satin	silver	AL/0005-D-S-E-90-OUT
		black	AL/0005-D-S-EB-90-OUT

MODEL 0005-D FIX series

Glass t (mm)	L (m)	art.
12 (12)	2,5	A19/0004-012-02.5
	5	A19/0004-012-05.0
	25	A19/0004-012-25.0
12,76 (66.2)	2,5	A19/0004-013-02.5
	5	A19/0004-013-05.0
	25	A19/0004-013-25.0
16,76 (88.2)	2,5	A19/0004-017-02.5
	5	A19/0004-017-05.0
	25	A19/0004-017-25.0
17,52 (88.4)	2,5	A19/0004-018-02.5
	5	A19/0004-018-05.0
	25	A19/0004-018-25.0
20,76 (1010.2)	2,5	A19/0004-021-02.5
	5	A19/0004-021-05.0
	25	A19/0004-021-25.0
21,52 (1010.4)	2,5	A19/0004-022-02.5
	5	A19/0004-022-05.0
	25	A19/0004-022-25.0

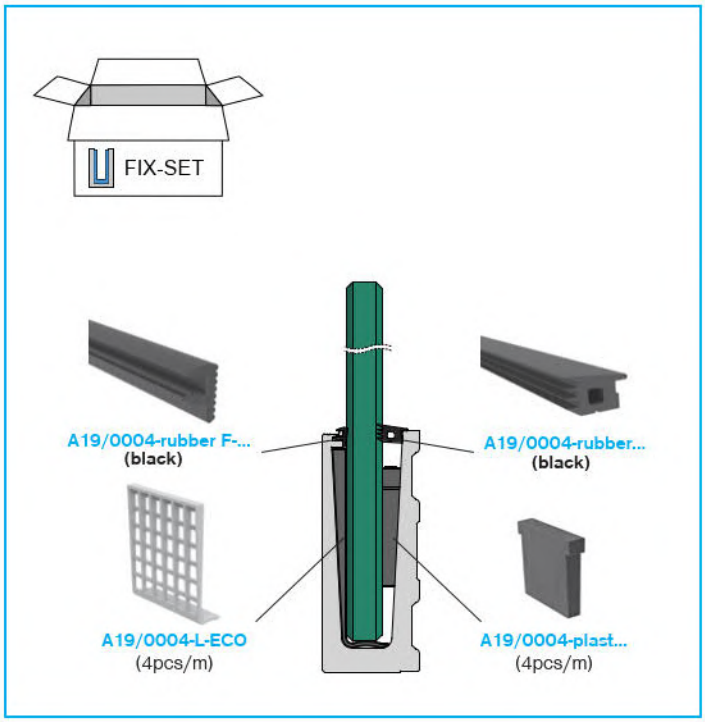

PVC-P - interier

EPDM - exterier

Quality	Finish	art.	L(m)	glass t
Rubber	gray (interier)	A19/0004-F-G-02.5	2,5	12-21,52
		A19/0004-F-G-05.0	5	
		A19/0004-F-G-25.0	25	
	black (exterier)	A19/0004-F-B-02.5	2,5	
		A19/0004-F-B-05.0	5	
		A19/0004-F-B-06.0	6	
		A19/0004-F-B-25.0	25	

PVC-P - interier

EPDM - exterier

Quality	Finish	art.	L(m)	glass t
Rubber	gray (interier)	A19/0004-17-18-G-02.5	2,5	16,76-17,52
		A19/0004-17-18-G-05.0	5	
		A19/0004-17-18-G-25.0	25	
	black (exterier)	A19/0004-rubber12-13-02.5	2,5	12,76-13,52
		A19/0004-rubber12-13-05.0	5	
		A19/0004-rubber12-13-06.0	6	
		A19/0004-rubber12-13-25.0	25	
		A19/0004-rubber17-18-02.5	2,5	16,76-17,52
		A19/0004-rubber17-18-05.0	5	
		A19/0004-rubber17-18-06.0	6	
		A19/0004-rubber17-18-25.0	25	
		A19/0004-rubber21-22-02.5	2,5	20,76-21,52
		A19/0004-rubber21-22-05.0	5	
		A19/0004-rubber21-22-06.0	6	
		A19/0004-rubber21-22-25.0	25	

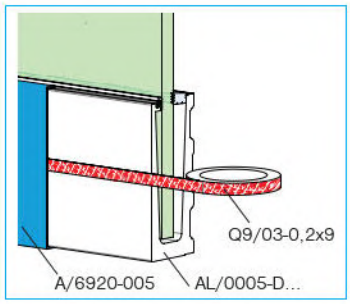

Material	Finish	Effect	art.	L	Q9/03...
ANODIZED ALUMINIUM	satin	silver	AL/0044-2500-S-E	2500	✓
			AL/0044-5000-S-E	5000	
		black	AL/0044-2500-S-EB	2500	
			AL/0044-5000-S-EB	5000	
CORTEN	raw		CA/0044-2500-CORTEN	2500	

MODEL 0005-D FIX series

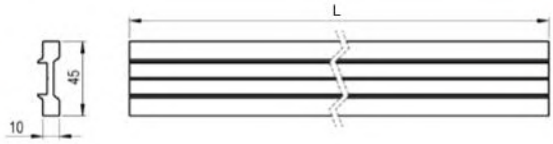

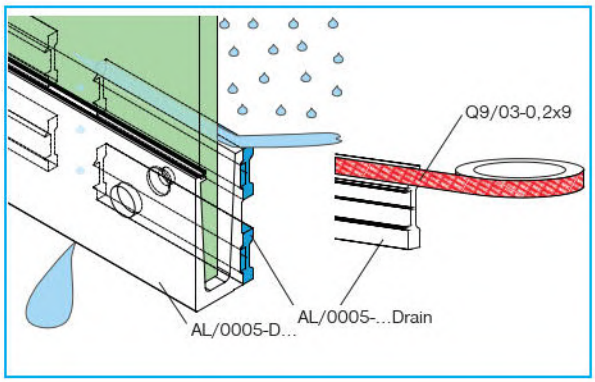

Material	Finish	Effect	art.	compatibility	L
ANODIZED ALUMINIUM	satin	silver	**AL/0005-S-E-1250-Drain**	AL/0005-D-1250-S-E AL/0005-D-2500-S-E	1250
			AL/0005-S-E-2500-Drain	AL/0005-D-5000-S-E AL/0005-D-6000-S-E	2500
		black	**AL/0005-S-EB-2500-Drain**	AL/0005-D-2500-S-EB AL/0005-D-5000-S-EB	

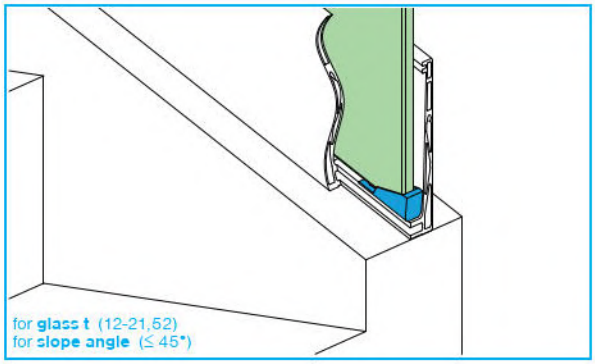

Quality	Finish	art.
PETG	gray	**A19/glass-stop**

new

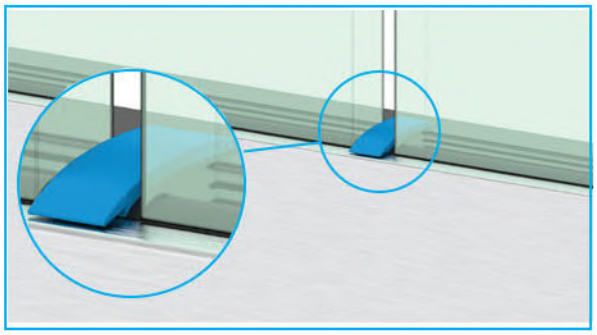

Quality	Finish	art.	L	glass t
Rubber	black	**A19/0004-D-B-100**	100	12-21,52

AL/0005-D				
	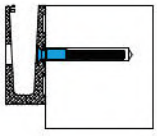		+	
	AL ANCHORS → 56-57			
ANCHORS	CHEMICAL		5pcs/m	1pcs/2,5m
	MECHANICAL	5pcs/m		

Material	Finish	Effect
ANODIZED ALUMINIUM	natural	silver

Material	Finish	Effect
ANODIZED ALUMINIUM	natural satin	black

Material	Finish
CORTEN	raw

Material	Finish	Effect
ANODIZED ALUMINIUM	satin	silver

Material	Finish	Effect
ANODIZED ALUMINIUM	satin	INOX

Material	Finish	Effect
INOX / ALUMINIUM	RAL	any color

new

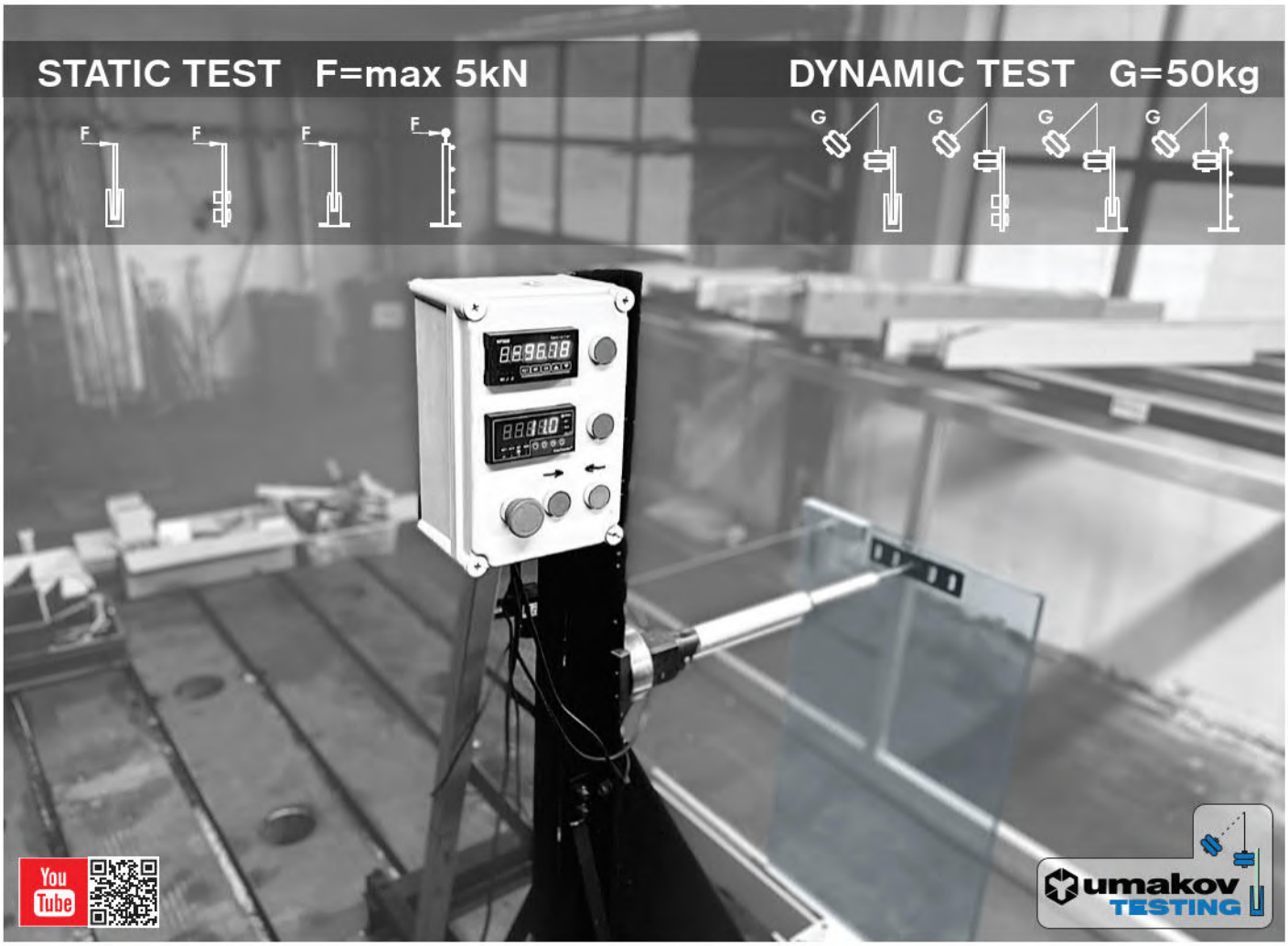

MODEL 0009 FIX series

STATIC STUDIO

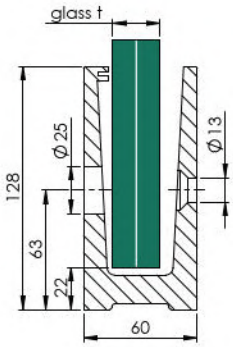

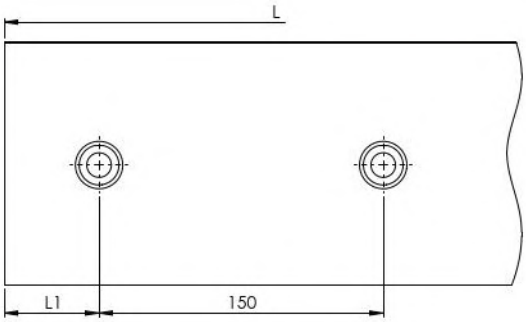

Material	Finish	Effect	art.	L	L1	G/h	glass t
ANODIZED ALUMINIUM	satin	silver	AL/0009-2500-S-E	2500	50	3kN	21,52-25,52
			AL/0009-5000-S-E	5000	100		

Material	Finish	Effect	art.
ANODIZED ALUMINIUM	satin	silver	AL/0038-004-S-E

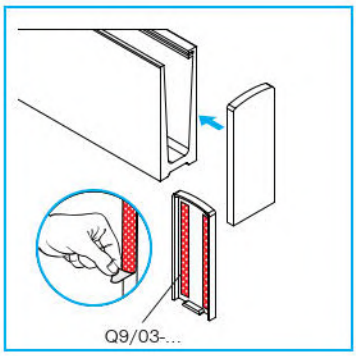

A24/0005-007

AL/0005-007

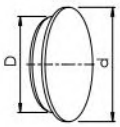

Material	Finish	art.	D	d
ANODIZED ALUMINIUM	satin	AL/0005-007	25	30
PVC	gray	A24/0005-007		

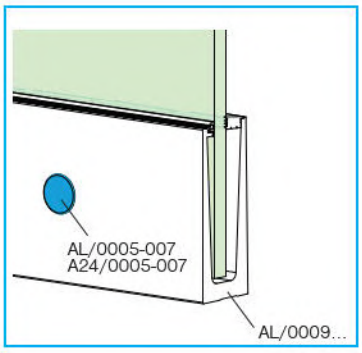

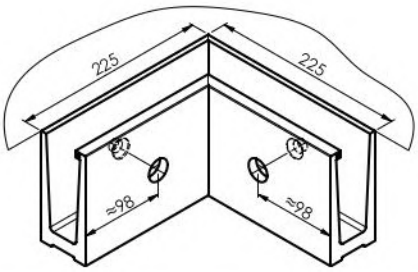

Material	Finish	Effect	art.
ANODIZED ALUMINIUM	satin	silver	AL/0009-S-E-90-IN

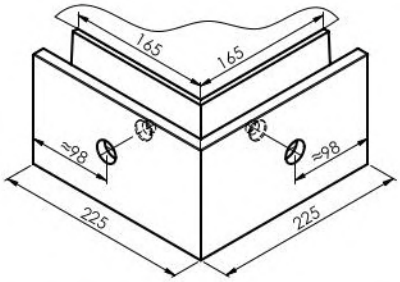

Material	Finish	Effect	art.
ANODIZED ALUMINIUM	satin	silver	AL/0009-S-E-90-OUT

MODEL 0009 FIX series

Glass t (mm)	L (m)	art.
21,52 (1010.4)	2,5	A19/0004-012-02.5
	5	A19/0004-012-05.0
	25	A19/0004-012-25.0
25,52 (1212.4)	2,5	A19/0008-026-02.5
	5	A19/0008-026-05.0
	25	A19/0008-026-25.0

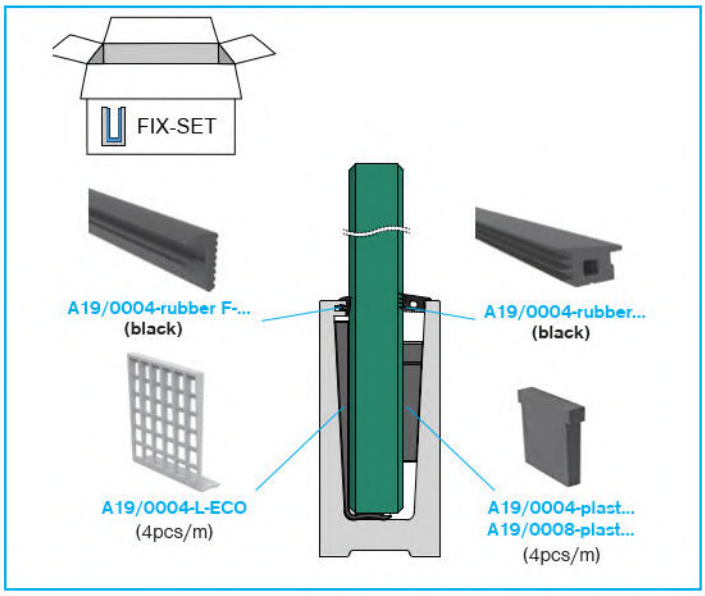

PVC-P - interier

EPDM - exterier

Quality	Finish	art.	L(m)	glass t
Rubber	gray (interier)	A19/0004-F-G-02.5	2,5	12-21,52
		A19/0004-F-G-05.0	5	
		A19/0004-F-G-25.0	25	
	black (exterier)	A19/0004-F-B-02.5	2,5	
		A19/0004-F-B-05.0	5	
		A19/0004-F-B-06.0	6	
		A19/0004-F-B-25.0	25	

PVC-P - interier

EPDM - exterier

Quality	Finish	art.	L(m)	glass t
Rubber	gray (interier)	A19/0004-17-18-G-02.5	2,5	16,76-17,52
		A19/0004-17-18-G-05.0	5	
		A19/0004-17-18-G-25.0	25	
	black (exterier)	A19/0004-rubber12-13-02.5	2,5	12,76-13,52
		A19/0004-rubber12-13-05.0	5	
		A19/0004-rubber12-13-06.0	6	
		A19/0004-rubber12-13-25.0	25	
		A19/0004-rubber17-18-02.5	2,5	16,76-17,52
		A19/0004-rubber17-18-05.0	5	
		A19/0004-rubber17-18-06.0	6	
		A19/0004-rubber17-18-25.0	25	
		A19/0004-rubber21-22-02.5	2,5	20,76-21,52
		A19/0004-rubber21-22-05.0	5	
		A19/0004-rubber21-22-06.0	6	
		A19/0004-rubber21-22-25.0	25	

Quality	Finish	art.	L	glass t
Rubber	black	A19/0004-D-B-100	100	12-21,52

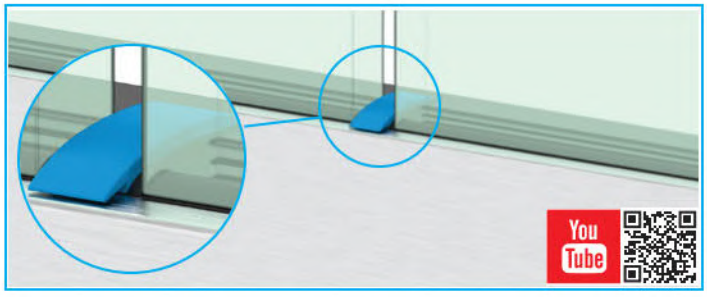

AL/0009 3kN

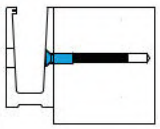

+

AL ANCHORS 56-57

ANCHORS

CHEMICAL	7 pcs/m	1pcs/2m

new

Quality	Finish	art.
PETG	gray	A19/glass-stop

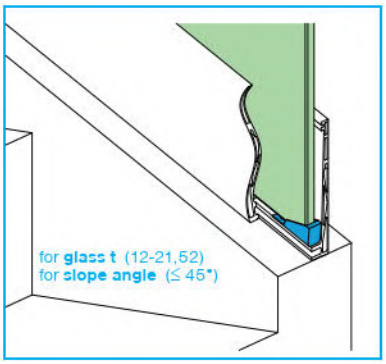

MODEL 0011 FIX series

STATIC STUDIO

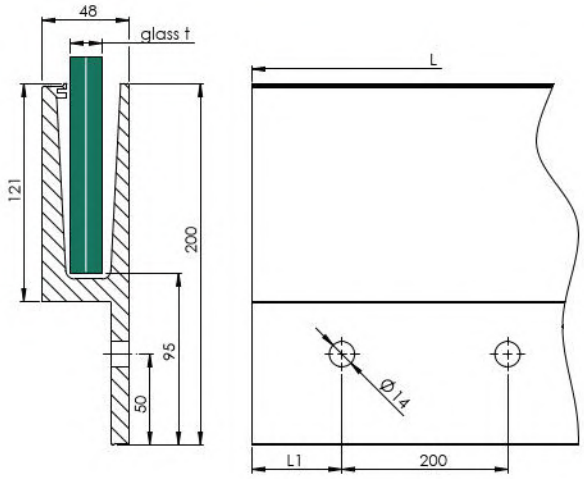

Material	Finish	Effect	art.	L	L1	G/h	glass t
ANODIZED ALUMINIUM	natural	silver	AL/0011-1250-N-E	1250		3kN	12-21,52
			AL/0011-2500-N-E	2500	50		
			AL/0011-5000-N-E	5000	100		
			AL/0011-6000-N-E	6000			
		black	AL/0011-2500-N-EB	2500	50		
			AL/0011-5000-N-EB	5000	100		

top

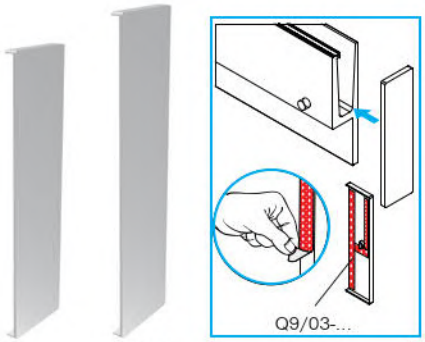

...ANGLE

Material	Finish	Effect	art.
ANODIZED ALUMINIUM	satin	silver	AL/0034-011-S-E
		black	AL/0034-011-S-EB
		silver	AL/0034-011-S-E-ANGLE

new

Material	Finish	Effect	art.	L
ANODIZED ALUMINIUM	satin	silver	AL/0045-2500-S-E	2500
			AL/0045-5000-S-E	5000
		black	AL/0045-2500-S-EB	2500
			AL/0045-5000-S-EB	5000
CORTEN	raw		CA/0045-2500-CORTEN	2500

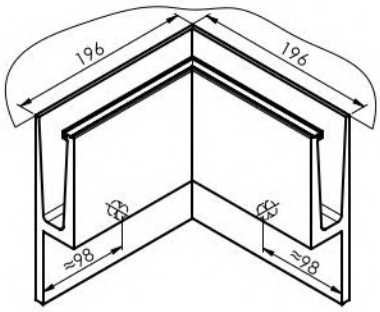

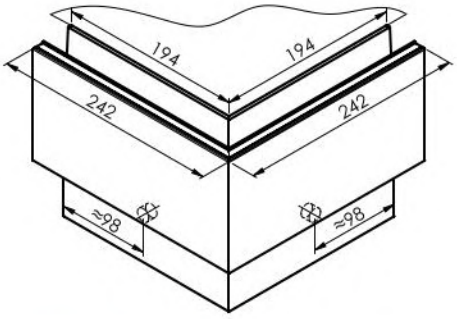

Material	Finish	Effect	art.
ANODIZED ALUMINIUM	satin	silver	AL/0011-N-E-90-IN
	natural	black	AL/0011-N-EB-90-IN

Material	Finish	Effect	art.
ANODIZED ALUMINIUM	satin	silver	AL/0011-N-E-90-OUT
	natural	black	AL/0011-N-EB-90-OUT

MODEL 0011 FIX series

Glass t (mm)	L (m)	art.
12 (12)	2,5	A19/0004-012-02.5
	5	A19/0004-012-05.0
	25	A19/0004-012-25.0
12,76 (66.2)	2,5	A19/0004-013-02.5
	5	A19/0004-013-05.0
	25	A19/0004-013-25.0
16,76 (88.2)	2,5	A19/0004-017-02.5
	5	A19/0004-017-05.0
	25	A19/0004-017-25.0
17,52 (88.4)	2,5	A19/0004-018-02.5
	5	A19/0004-018-05.0
	25	A19/0004-018-25.0
20,76 (1010.2)	2,5	A19/0004-021-02.5
	5	A19/0004-021-05.0
	25	A19/0004-021-25.0
21,52 (1010.4)	2,5	A19/0004-022-02.5
	5	A19/0004-022-05.0
	25	A19/0004-022-25.0

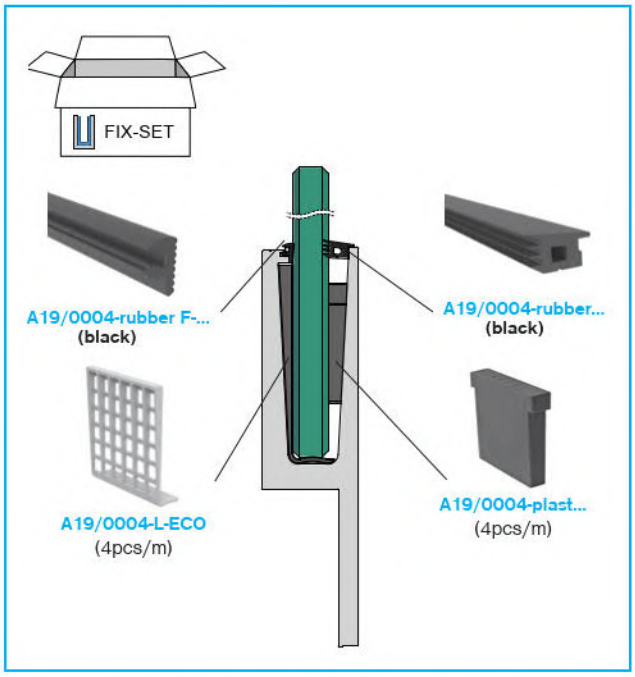

PVC-P - interier

EPDM - exterier

Quality	Finish	art.	L(m)	glass t
Rubber	gray (interier)	A19/0004-F-G-02.5	2,5	12-21,52
		A19/0004-F-G-05.0	5	
		A19/0004-F-G-25.0	25	
	black (exterier)	A19/0004-F-B-02.5	2,5	
		A19/0004-F-B-05.0	5	
		A19/0004-F-B-06.0	6	
		A19/0004-F-B-25.0	25	

PVC-P - interier

EPDM - exterier

Quality	Finish	art.	L(m)	glass t
Rubber	gray (interier)	A19/0004-17-18-G-02.5	2,5	16,76-17,52
		A19/0004-17-18-G-05.0	5	
		A19/0004-17-18-G-25.0	25	
	black (exterier)	A19/0004-rubber12-13-02.5	2,5	12,76-13,52
		A19/0004-rubber12-13-05.0	5	
		A19/0004-rubber12-13-06.0	6	
		A19/0004-rubber12-13-25.0	25	
		A19/0004-rubber17-18-02.5	2,5	16,76-17,52
		A19/0004-rubber17-18-05.0	5	
		A19/0004-rubber17-18-06.0	6	
		A19/0004-rubber17-18-25.0	25	
		A19/0004-rubber21-22-02.5	2,5	20,76-21,52
		A19/0004-rubber21-22-05.0	5	
		A19/0004-rubber21-22-06.0	6	
		A19/0004-rubber21-22-25.0	25	

Quality	Finish	art.	L	glass t
Rubber	black	A19/0004-D-B-100	100	12-21,52

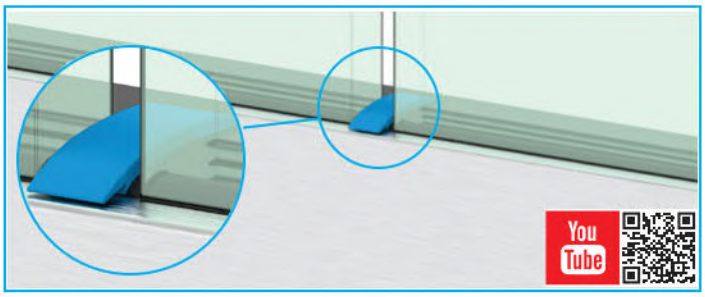

AL/0011	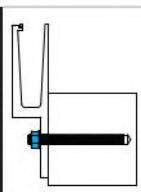					+	
		AL ANCHORS 56-57					
ANCHORS	CHEMICAL	5pcs/m					
	MECHANICAL		5pcs/m	5pcs/m	1pcs/m	1pcs/2,5m	

MODEL 0011-ProXL FLEX/FIX series

STATIC STUDIO

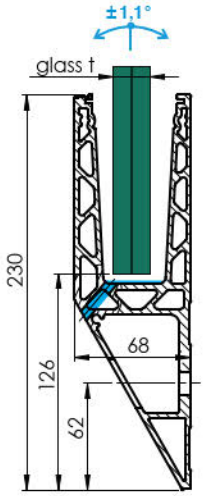

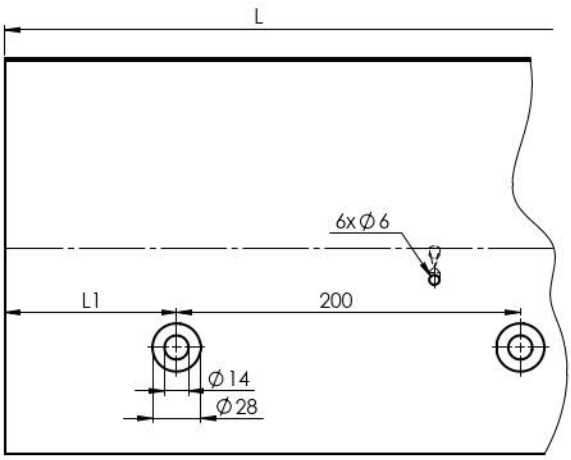

Material	Finish	Effect	art.	L	L1	G/h	glass t	AL/0011-PRO..Drain		
ANODIZED ALUMINIUM	natural	silver	AL/0011-ProXL-2500-N-E	2500	50	2kN	16,76-31,52	built in drain	✓	±1,1°
			AL/0011-ProXL-5000-N-E	5000	100					

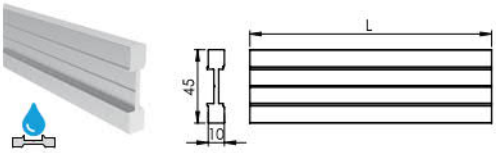

Material	Finish	Effect	art.	L
ANODIZED ALUMINIUM	satin	silver	AL/0011-PRO-S-E-1250-Drain	1250
			AL/0011-PRO-S-E-2500-Drain	2500

new

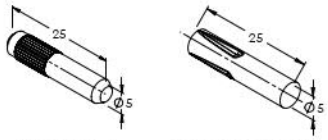

A14/0005-pin A-DIN 1474-5x25

new

Material	Finish	art.
AISI304	satin	A-DIN 1474-5x25
AISI316		A14/0005-pin

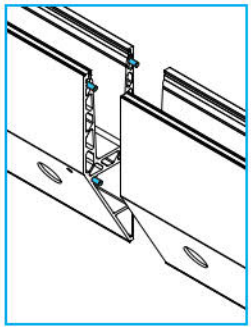

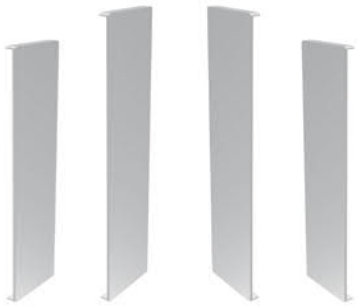

...ANGLE ...ANGLE

Material	Finish	Effect	art.
ANODIZED ALUMINIUM	satin	silver	AL/0034-011-ProXL-S-E
			AL/0034-011-ProXL-S-E-ANGLE
			AL/0035-011-ProXL-S-E
			AL/0035-011-ProXL-S-E-ANGLE

new

new

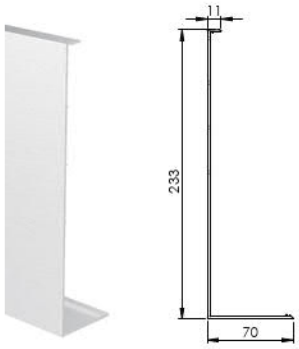

Material	Finish	Effect	art.	L
ANODIZED ALUMINIUM	satin	silver	AL/0046-2500-S-E	2500
			AL/0046-5000-S-E	5000

new

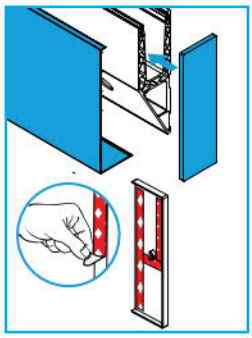

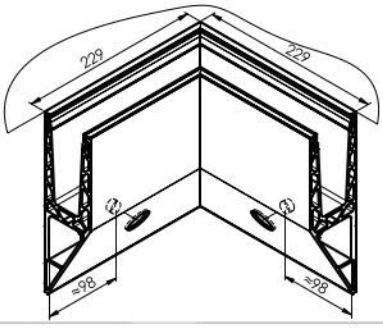

Material	Finish	Effect	art.
ANODIZED ALUMINIUM	satin	silver	AL/0011-ProXL-N-E-90-IN

new

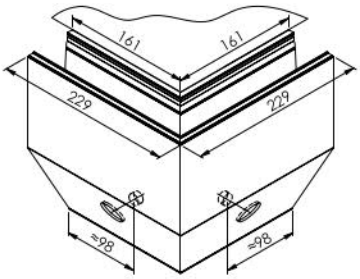

Material	Finish	Effect	art.
ANODIZED ALUMINIUM	satin	silver	AL/0011-ProXL-N-E-90-OUT

new

MODEL 0011-ProXL FLEX/FIX series

Glass t (mm)	L (m)	FIX	FLEX ±1,1°
16,76 (8.8.2)	2,5	-	A19/FLEX2-017-SET-02.5
	5		A19/FLEX2-017-SET-05.0
17,52 (8.8.4)	2,5		A19/FLEX2-018-SET-02.5
	5		A19/FLEX2-018-SET-05.0
20,76 (10.10.2)	2,5		A19/FLEX2-021-SET-02.5
	5		A19/FLEX2-021-SET-05.0
21,52 (10.10.4)	2,5		A19/FLEX2-022-SET-02.5
	5		A19/FLEX2-022-SET-05.0
24,76 (12.12.2)	2,5	A19/FIX2-25-SET-02.5	-
	5	A19/FIX2-25-SET-05.0	
25,52 (12.12.4)	2,5	A19/FIX2-26SET-02.5	
	5	A19/FIX2-26-SET-05.0	
31,52	2,5	A19/FIX2-32-SET-02.5	
(15.15.4)	5	A19/FIX2-32-SET-05.0	

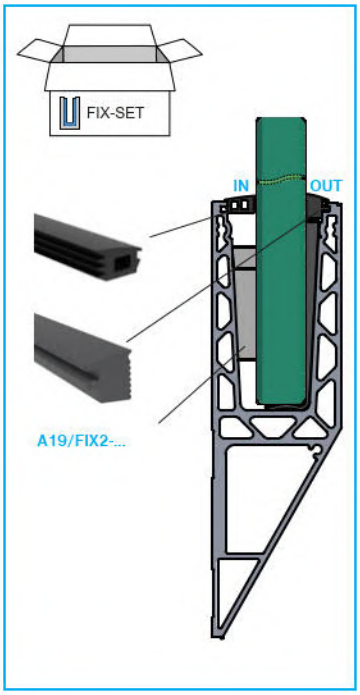

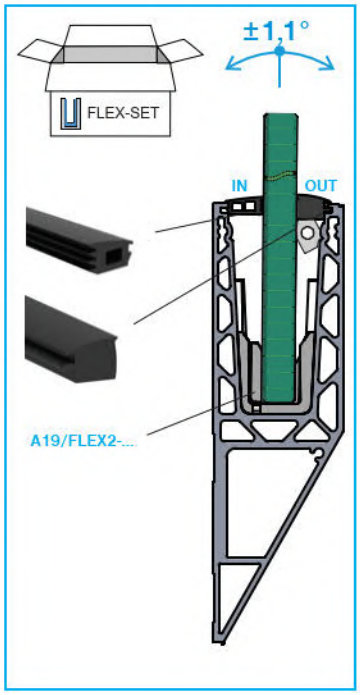

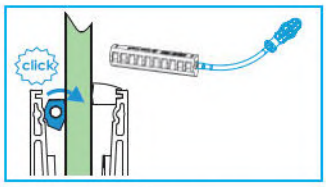

art.	total length	ext. square
Q8/70-275-PRO	275mm	1/4"

Quality	Finish	art.	L	glass t
Rubber	black	A19/0004-D-B-100	100	12-21,52

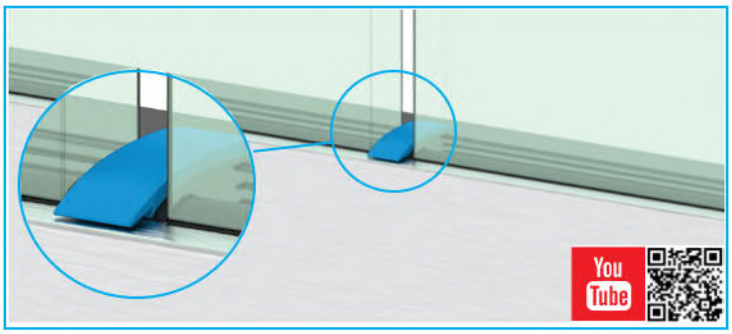

AL/glass-mont-PRO

art.	use
AL/glass-mont-PRO	FLEX/FIX

new

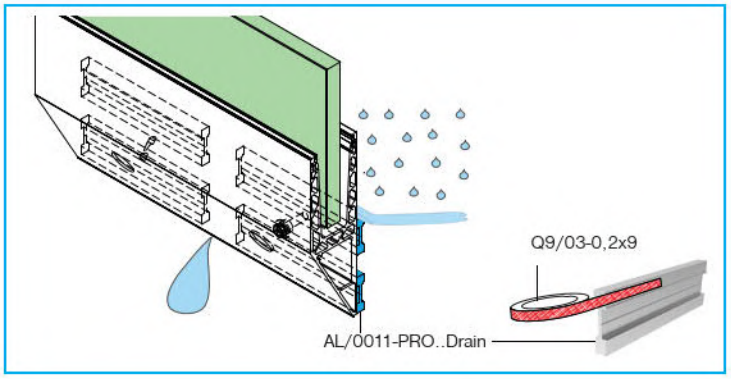

AL/0011-ProXL							
						+	
		AL ANCHORS → 56-57					
ANCHORS	CHEMICAL	5pcs/m					
	MECHANICAL		5pcs/m	5pcs/m	1pcs/m	1pcs/2,5m	

MODEL 0018 FLEX/FIX series

STATIC STUDIO

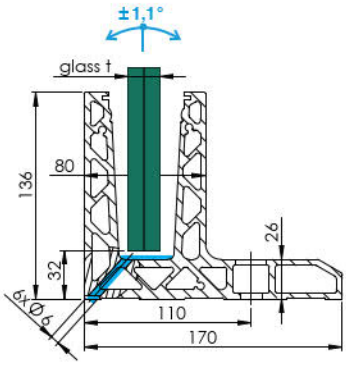

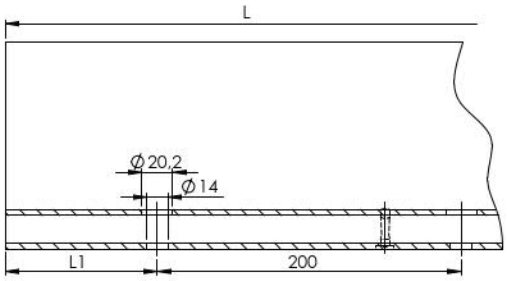

Material	Finish	Effect	art.	L	L1	G/h	glass t		AL/0011-PRO...Drain		
ANODIZED ALUMINIUM	satin	silver	AL/0018-2500-S-E	2500	50	3kN	16,76-31,52	built in drain	✓	±1,1°	new
			AL/0018-5000-S-E	5000	100						

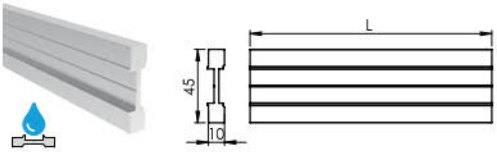

Material	Finish	Effect	art.	L	
ANODIZED ALUMINIUM	satin	silver	AL/0011-PRO-S-E-1250-Drain	1250	new
			AL/0011-PRO-S-E-2500-Drain	2500	

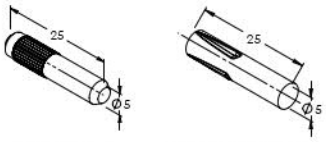

A14/0005-pin A-DIN 1474-5x25 new

Material	Finish	art.
AISI304	satin	A-DIN 1474-5x25
AISI316		A14/0005-pin

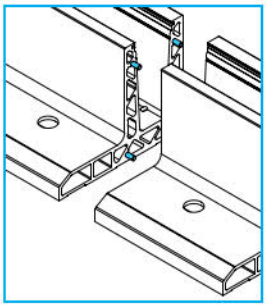

Material	Finish	Effect	art.
ANODIZED ALUMINIUM	satin	silver	AL/0034-018-S-E
			AL/0035-018-S-E

new

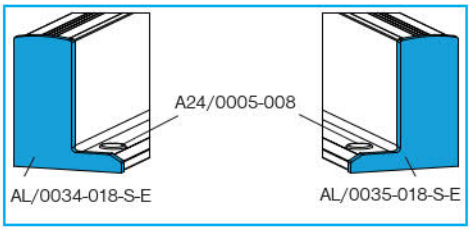

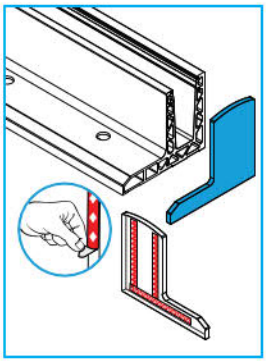

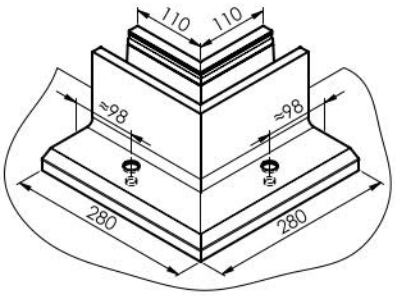

Material	Finish	Effect	art.
ANODIZED ALUMINIUM	satin	silver	AL/0018-S-E-90-IN

new

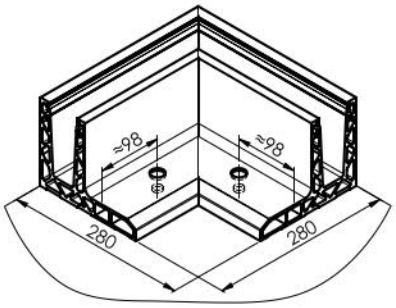

Material	Finish	Effect	art.
ANODIZED ALUMINIUM	satin	silver	AL/0018-S-E-90-OUT

new

MODEL 0018 FLEX/FIX series

Glass t (mm)	L (m)	FIX	FLEX ±1,1°
16,76 (8.8.2)	2,5	-	A19/FLEX2-017-SET-02.5
	5		A19/FLEX2-017-SET-05.0
17,52 (8.8.4)	2,5		A19/FLEX2-018-SET-02.5
	5		A19/FLEX2-018-SET-05.0
20,76 (10.10.2)	2,5		A19/FLEX2-021-SET-02.5
	5		A19/FLEX2-021-SET-05.0
21,52 (10.10.4)	2,5		A19/FLEX2-022-SET-02.5
	5		A19/FLEX2-022-SET-05.0
24,76 (12.12.2)	2,5	A19/FIX2-25-SET-02.5	-
	5	A19/FIX2-25-SET-05.0	
25,52 (12.12.4)	2,5	A19/FIX2-26SET-02.5	
	5	A19/FIX2-26-SET-05.0	
31,52 (15.15.4)	2,5	A19/FIX2-32-SET-02.5	
	5	A19/FIX2-32-SET-05.0	

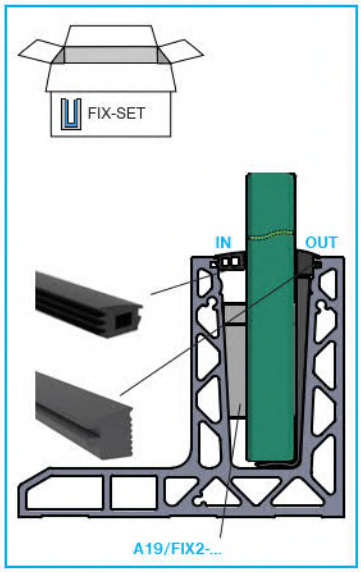

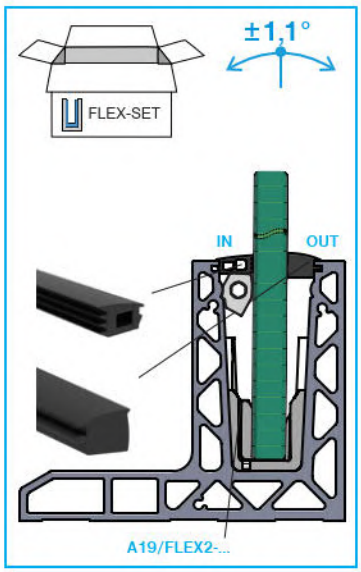

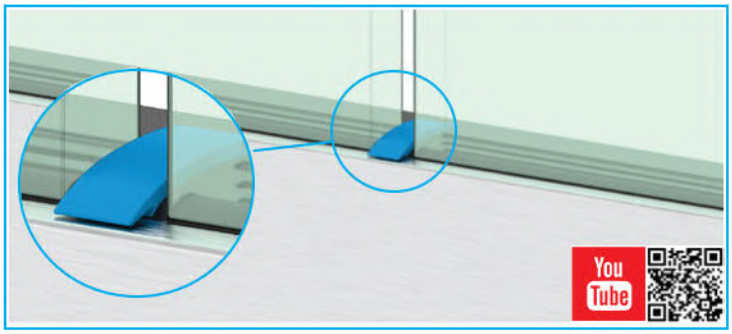

Quality	Finish	art.	L	glass t
Rubber	black	A19/0004-D-B-100	100	12-21,52

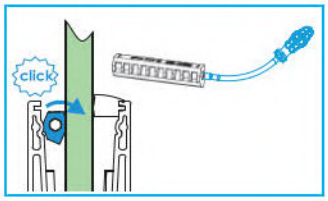

art.	total length	ext. square
Q8/70-275-PRO	275mm	1/4"

AL/glass-mont-PRO

art.	use
AL/glass-mont-PRO	FLEX/FIX

new

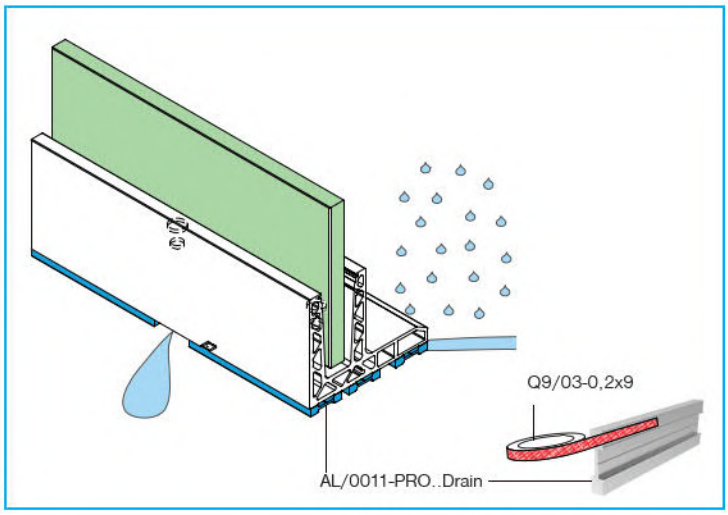

AL/0018...		A24/0005-008	AL ANCHORS 56-57					
ANCHORS	CHEMICAL	5pcs/m		5pcs/m	5pcs/m	5pcs/m	1pcs/2,5m	
	MECHANICAL	5pcs/m	5pcs/m	5pcs/m	5pcs/m			

MODEL 0019 FLEX/FIX series

STATIC STUDIO

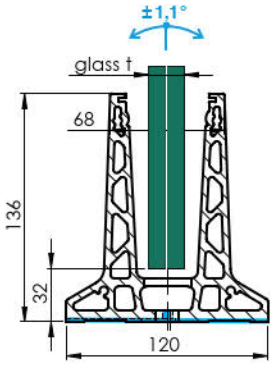

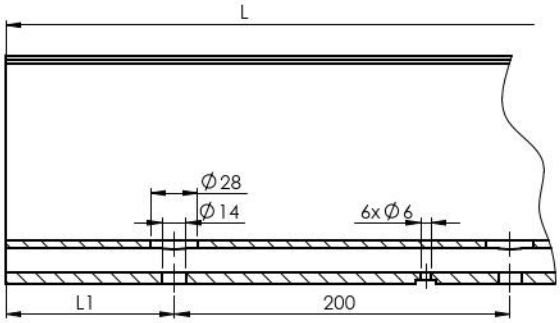

Material	Finish	Effect	art.	L	L1	G/h	glass t		AL/0011-PRO..Drain		
ANODIZED ALUMINIUM	satin	silver	AL/0019-2500-N-E	2500	50	3kN	16,76-31,52	built in drain	✓	±1,1°	new
			AL/0019-5000-N-E	5000	100						

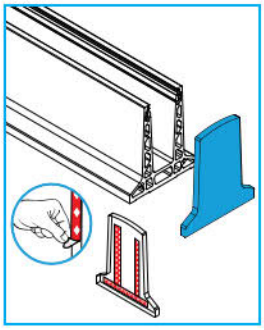

new

Material	Finish	Effect	art.
ANODIZED ALUMINIUM	satin	silver	AL/0034-019-S-E

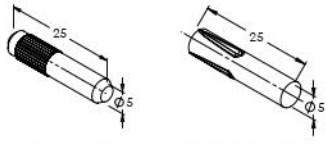

A14/0005-pin A-DIN 1474-5x25

new

Material	Finish	art.
AISI304	satin	A-DIN 1474-5x25
AISI316		A14/0005-pin

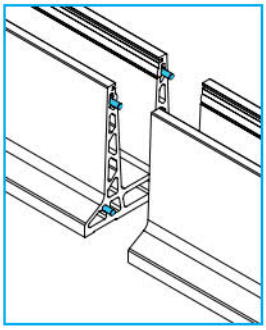

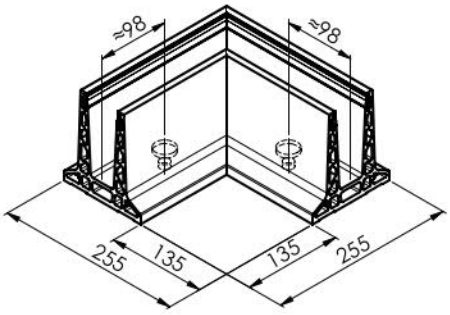

Material	Finish	Effect	art.
ANODIZED ALUMINIUM	satin	silver	AL/0019-S-E-90

new

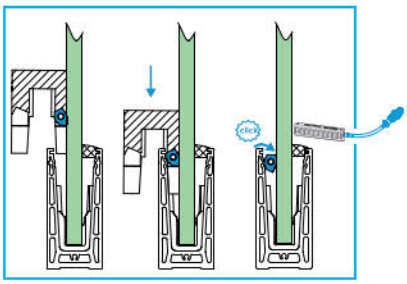

new

Quality	Finish	art.
PETG	gray	MP/excenter-mount

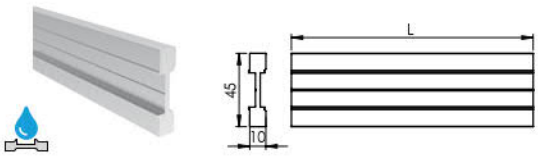

Material	Finish	Effect	art.	L
ANODIZED ALUMINIUM	satin	silver	AL/0011-PRO-S-E-1250-Drain	1250
			AL/0011-PRO-S-E-2500-Drain	2500

new

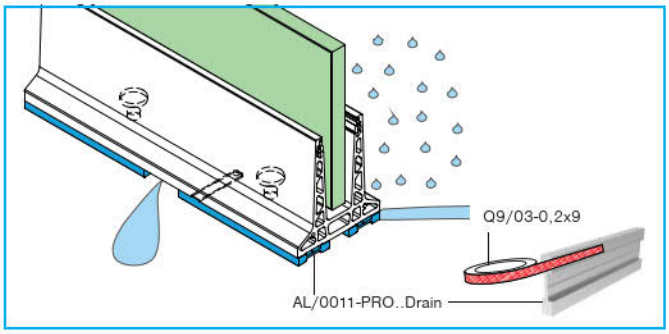

MODEL 0019 FLEX/FIX series

Glass t (mm)	L (m)	FIX	FLEX ±1,1°
16,76 (8.8.2)	2,5	-	A19/FLEX2-017-SET-02.5
	5		A19/FLEX2-017-SET-05.0
17,52 (8.8.4)	2,5		A19/FLEX2-018-SET-02.5
	5		A19/FLEX2-018-SET-05.0
20,76 (10.10.2)	2,5		A19/FLEX2-021-SET-02.5
	5		A19/FLEX2-021-SET-05.0
21,52 (10.10.4)	2,5		A19/FLEX2-022-SET-02.5
	5		A19/FLEX2-022-SET-05.0
24,76 (12.12.2)	2,5	A19/FIX2-25-SET-02.5	-
	5	A19/FIX2-25-SET-05.0	
25,52 (12.12.4)	2,5	A19/FIX2-26SET-02.5	
	5	A19/FIX2-26-SET-05.0	
31,52 (15.15.4)	2,5	A19/FIX2-32-SET-02.5	
	5	A19/FIX2-32-SET-05.0	

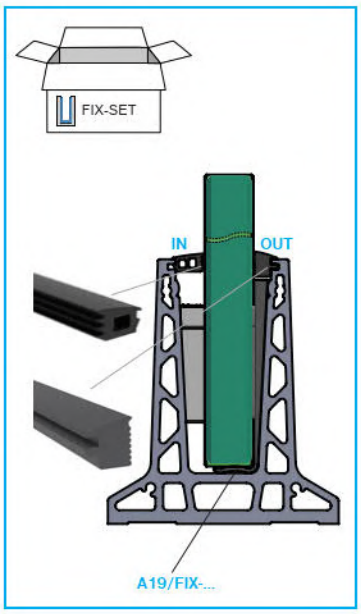

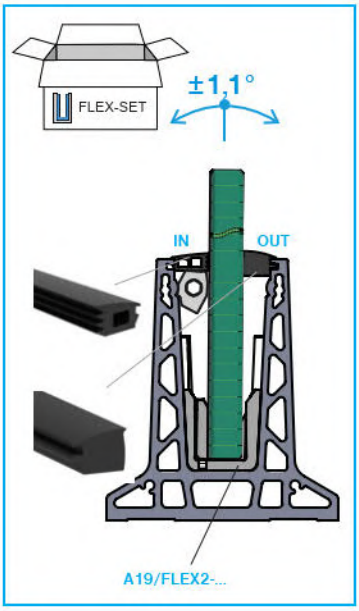

Quality	Finish	art.	L	glass t
Rubber	black	A19/0004-D-B-100	100	12-21,52

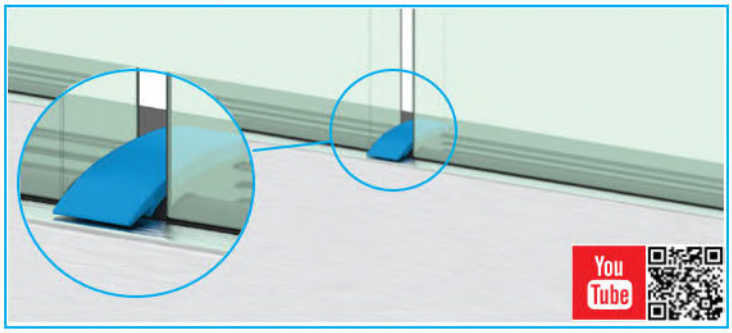

AL/glass-mont-PRO

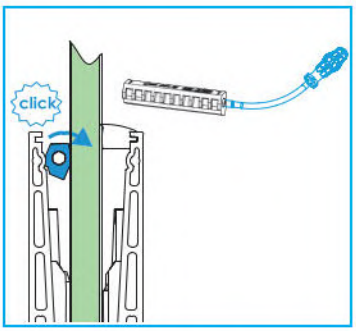

art.	use
AL/glass-mont-PRO	FLEX/FIX

new

art.	total length	ext. square
Q8/70-275-PRO	275mm	1/4"

AL/0019...						
					+	
		AL ANCHORS → 56-57				
ANCHORS	CHEMICAL		5pcs/m	5pcs/m	5pcs/m	1pcs/2,5m
	MECHANICAL	5pcs/m	5pcs/m	5pcs/m		

AL ANCHORS

		NON-CERTIFIED ANCHORS		CERTIFIED ANCHORS - ETA option1 *			FASTENERS		
AL/0004 1kN	IN	A5/08-105x11xM8	Q5/01B-400						
				Q5/08-VI-IG-M8-100/S...	Q5/01-WIT-UH300...		W-DIN 7991 M8x20-P		
						Q5/-08-FH12-50[3]*			
	OUT	A5/08-105x11xM8	Q5/01B-400						
				A5/08-VI-IG-M8-100/A4...	Q5/01-WIT-UH300...		W-DIN 7991-A4 M8x20-P		
						A14/08-FH12-50[3]*			
AL/0004-ECO 1kN	IN	A19/27-M10	Q5/01B-400	Q5/08-VI-IG-M10-80/S...	Q5/01-WIT-UH300...		DIN 7380 M10x20 8.8-Zn		DIN 125 10-Zn
						Q5/08-HAZ-M8-85S/S...[3]*			
	OUT	A19/27-M10	Q5/01B-400	A5/08-VI-IG-M10-80/A4...	Q5/01-WIT-UH300...		A4-DIN 7380 M10x20		A-DIN 125-A2 M10
						A5/08-HAZ-M8-85S/A4...[3]*			
AL/0004-LIGHT 0,5 kN	IN	A19/27-M10	Q5/01B-400	Q5/08-VI-IG-M-10-80/S...	Q5/01-WIT-UH300...		DIN 7380 M10x20 8.8-Zn		DIN 125 10-Zn
				Q5/08-VM 250-M10-150...	Q5/01-WIT-VM 250...		DIN 934 M10-Zn		DIN 125 10-Zn
						Q5/08-HAZ-M8-85S/S...			
						Q5/08-BS-S-10-90/S...			
	OUT	A19/27-M10	Q5/01B-400	A5/08-VI-IG-M10-80/A4...	Q5/01-WIT-UH300...		A4-DIN 7380 M10x20		A-DIN 125-A2 M10
				A5/08-VM 250-M10-150-A4...	Q5/01-WIT-VM 250...		A4-DIN 934 M10		A-DIN 125-A2 M10
						A5/08-HAZ-M8-85S/A4...			
						A5/08-BS-S-10-90/A4...			
AL/0004-UnoXL 1kN / AL/0004-PRO 1kN	IN	A19/27-M10	Q5/01B-400	Q5/08-VI-IG-M-10-80/S...	Q5/01-WIT-UH300...		DIN 7380 M10x20 8.8-Zn		DIN 125 10-Zn
						Q5/08-HAZ-M8-85S/S...			
						Q5/08-BS-S-10-90/S...			
	OUT	A19/27-M10	Q5/01B-400	A5/08-VI-IG-M10-80/A4...	Q5/01-WIT-UH300...		A4-DIN 7380 M10x20		A-DIN 125-A2 M10
						A5/08-HAZ-M8-85S/A4...[3]*			
						A5/08-BS-S-10-90/A4...			
AL/0008 3kN	IN	A5/08-105x11xM8	Q5/01B-400						
				Q5/08-VI-IG-M12-125/S...	Q5/01-WIT-UH300...		DIN 7991 M12x30 8.8-Zn		
	OUT	A5/08-105x11xM8	Q5/01B-400						
				A5/08-VI-IG-M12-125/A4...	Q5/01-WIT-UH300...		A4-DIN 7991 M12x30		
AL/0006[1] 1kN	IN	A-DIN 975 M12	Q5/01B-400					A-DIN 934 M12	A-DIN 125-A2 M12
				Q5/08-VM 250-M12-135...	Q5/01-WIT-VM 250...				
	OUT	A-DIN 975 M12	Q5/01B-400					A-DIN 934 M12	A-DIN 125-A2 M12
				A5/08-VM 250-M12-135-A4...	Q5/01-WIT-VM 250...				
AL/0006[2] 1kN	IN	A-DIN 975 M12	Q5/01B-400					A-DIN 1587-A2 M12	A-DIN 125-A2 M12
						Q5/08-HAZ-M8-85S/S...			
	OUT	A-DIN 975 M12	Q5/01B-400					A-DIN 1587-A2 M12	A-DIN 125-A2 M12
						A5/08-HAZ-M8-85S/A4...			
AL/0006-UNO[1] 1kN / AL/0006-ECO[1] 1kN	IN	A-DIN 975 M12	Q5/01B-400					A-DIN 934 M12	A-DIN 125-A2 M12
				Q5/08-VM 250-M12-135...	Q5/01-WIT-VM 250...				
	OUT	A-DIN 975 M12	Q5/01B-400					A-DIN 934 M12	A-DIN 125-A2 M12
				A5/08-VM 250-M12-135-A4...	Q5/01-WIT-VM 250...				
AL/0006-UNO[2] 1kN / AL/0006-ECO[2] 1kN	IN	A19/27-M10	Q5/01B-400	Q5/08-VI-IG-M10-80/S...	Q5/01-WIT-UH300...		DIN 7380 M10x20 8.8-Zn		DIN 125 10-Zn
						Q5/08-HAZ-M8-85S/S...			
	OUT	A19/27-M10	Q5/01B-400	A5/08-VI-IG-M10-80/A4...	Q5/01-WIT-UH300...		A4-DIN 7380 M10x20		A-DIN 125-A2 M10
						A5/08-HAZ-M8-85S/A4...			
AL/0006-UNO[3] 1kN	IN	A-DIN 975 M12	Q5/01B-400					A-DIN 1587-A2 M12	A-DIN 125-A2 M12
				Q5/08-VI-IG-M10-80/S...	Q5/01-WIT-UH300...		DIN7380 M10x30 8.8-Zn		DIN 9021 10-Zn
	OUT	A-DIN 975 M12	Q5/01B-400					A-DIN 1587-A2 M12	A-DIN 125-A2 M12
				A5/08-VI-IG-M10-80/A4...	Q5/01-WIT-UH300...		A4-DIN7380 M10x30		A-DIN 9021-A2 M10

AL ANCHORS

			NON-CERTIFIED ANCHORS		CERTIFIED ANCHORS - ETA option1 *			FASTENERS		
1kN	AL/0006-ECO³	IN	A-DIN 975 M12	Q5/01B-400					A-DIN 1587-A2 M12	A-DIN 125-A2 M12
					Q5/08-VI-IG-M10-80/S...	Q5/01-WIT-UH300...		DIN7380 M10x30 8.8-Zn		DIN 9021 10-Zn
							Q5/08-HAZ-M10-106S/S...			
		OUT	A-DIN 975 M12	Q5/01B-400					A-DIN 1587-A2 M12	A-DIN 125-A2 M12
					A5/08-VI-IG-M10-80/A4...	Q5/01-WIT-UH300...		A4-DIN7380 M10x30		A-DIN 9021-A2 M10
							A5/08-HAZ-M10-106S/A4...			
1kN	AL/0005-D	IN	A5/08-105x11xM8	Q5/01B-400						
					Q5/08-VI-IG-M8-100/S...	Q5/01-WIT-UH300...		W-DIN 7991 M8x20-P		
							Q5/08-FH12-50			
							Q5/08-HAZ-M8-80SK/S...			
		OUT	A5/08-105x11xM8	Q5/01B-400						
					A5/08-VI-IG-M8-100/A4...	Q5/01-WIT-UH300...		W-DIN 7991-A4 M8x20-P		
							A14/08-FH12-50			
							A5/08-HAZ-M8-80SK/A4...			
3kN	AL/0009	IN	A5/08-105x11xM8	Q5/01B-400						
					Q5/08–VI-IG-M12-125/S...	Q5/01-WIT-UH300...		DIN 7991 M12x30 8.8-Zn		
		OUT	A5/08-105x11xM8	Q5/01B-400						
					A5/08-VI-IG-M12-125/A4...	Q5/01-WIT-UH300...		A4-DIN 7991 M12x30		
1kN	AL/0011	IN	A-DIN 975 M12	Q5/01B-400					A-DIN 934 M12	A-DIN 125-A2 M12
					Q5/08-VM 250-M12-135...	Q5/01-WIT-VM 250...				
							Q5/-08-FBN12-30...[2*]			
							Q5/08-HAZ-M8-85S/S...			
		OUT	A-DIN 975 M12	Q5/01B-400					A-DIN 934 M12	A-DIN 125-A2 M12
					A5/08-VM 250-M12-135-A4...	Q5/01-WIT-VM 250...				
							A-Q5/08-FBN12-30...[2*]			
							A5/08-HAZ-M8-85S/A4...			
1kN / 1kN	AL/0005-UNO / AL/0011-ProXL	IN	A-DIN 975 M10	Q5/01B-400	Q5/08-VM 250-M10-80...	Q5/01-WIT-VM 250...			A-DIN 934 M10	A-DIN 125-A2 M10
							Q5/-08-FBN12-30...[2*]			
							Q5/08-HAZ-M8-85S/S...			
		OUT	A-DIN 975 M10	Q5/01B-400	A5/08-VM 250-M10-110-A4...	Q5/01-WIT-VM 250...			A-DIN 934 M10	A-DIN 125-A2 M10
							A-Q5/08-FBN12-30...[2*]			
							A5/08-HAZ-M8-85S/A4...			
3kN	AL/0018	IN	A19/27-M10	Q5/01B-400	Q5/08-VI-IG-M-10-80/S...	Q5/01-WIT-UH300...		DIN 7380 M10x20 8.8-Zn		DIN 125 10-Zn
					Q5/08-VM 250-M12-155...	Q5/01-WIT-VM 250...			A-DIN 934 M12	WIT-SHB M12-Zn
							Q5/08-HAZ-M8-85S/S...			
		OUT	A19/27-M10	Q5/01B-400	A5/08-VI-IG-M10-80/A4...	Q5/01-WIT-UH300...		A4-DIN 7380 M10x20		A-DIN 125-A2 M10
					A5/08-VM 250-M12-155-A4...	Q5/01-WIT-VM 250...			A-DIN 934 M12	A4-WIT-SHB M12
							A5/08-HAZ-M8-85S/A4...			
2kN	AL/0019	IN	A19/27-M10	Q5/01B-400	Q5/08-VI-IG-M-10-80/S...	Q5/01-WIT-UH300...		DIN 7380 M10x20 8.8-Zn		DIN 125 10-Zn
					Q5/08-VM 250-M10-90...	Q5/01-WIT-UH300...			A-DIN 934 M10	WIT-SHB M10-Zn
							Q5/08-HAZ-M10-106S/S...			
		OUT	A19/27-M10	Q5/01B-400	A5/08-VI-IG-M10-80/A4...	Q5/01-WIT-UH300...		A4-DIN 7380 M10x20		A-DIN 125-A2 M10
					A5/08-VM 250-M10-115-A4...	Q5/01-WIT-UH300...			A-DIN 934 M10	A4-WIT-SHB M10
							A5/08-HAZ-M10-106S/A4...			

* certification "ETA option1" for cracked and uncracked concrete
2* certification "ETA option7" for uncracked concrete only
3* for load ≤ 0,7kN
! the table applies only to the situation without the use of drain for profiles

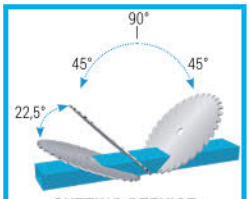

CUTTING SERVICE
Ø 600 mm saw blade

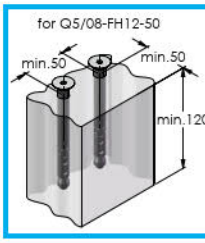

Please refer to the respective certificates or your sales representative for specifications such as mounting detail or glass dimensions

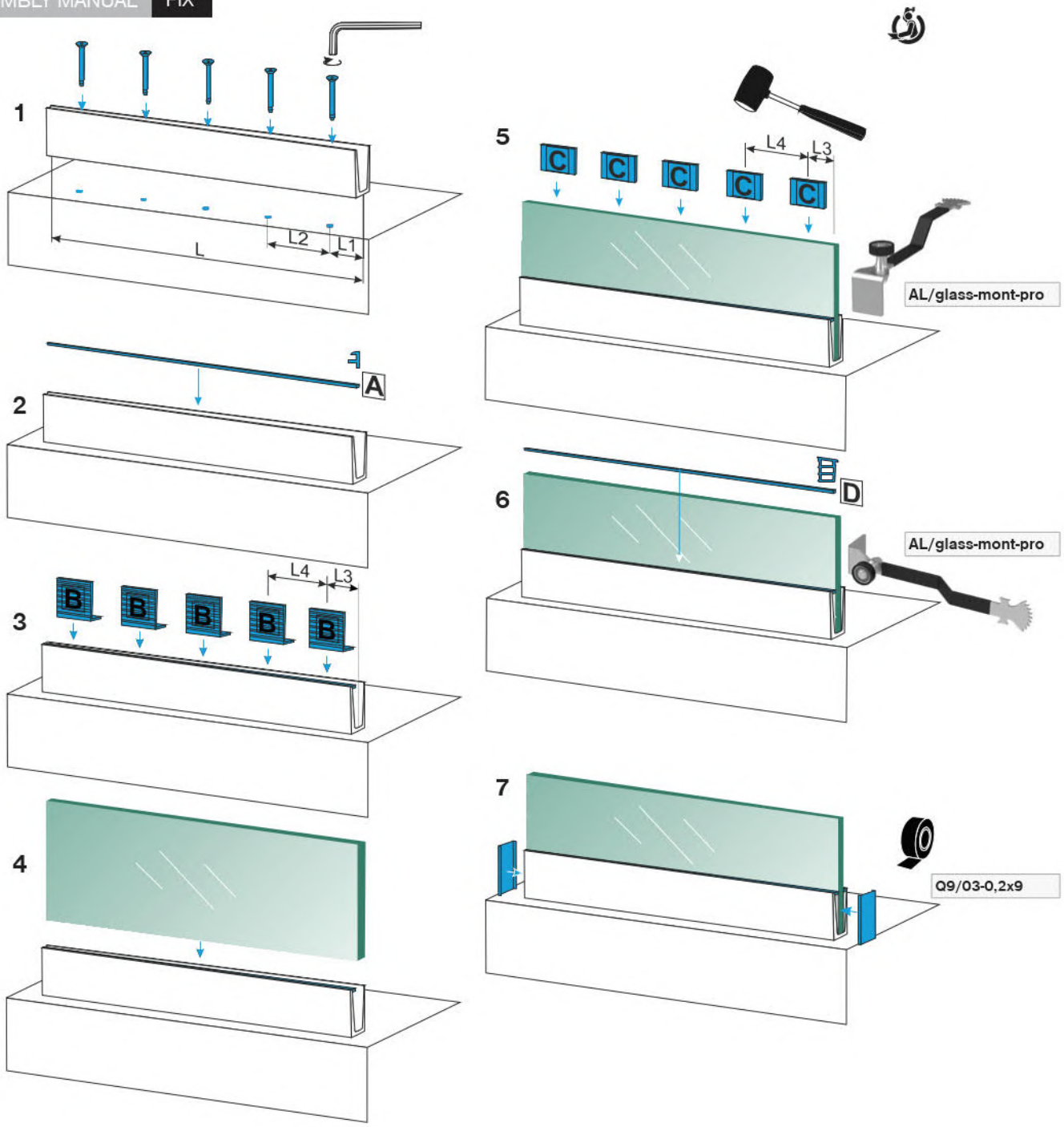

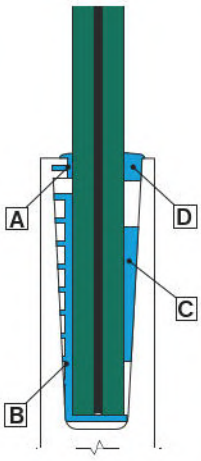

		L	L1	L2	L3	L4
	AL/0004-...	1250		200	125	250
		2500	50			
		5000	100			
		6000				
	AL/0008-...	2500	50			
		5000	100			
	AL/0006-...	1250				
		2500	50			
		5000	100			
		6000				

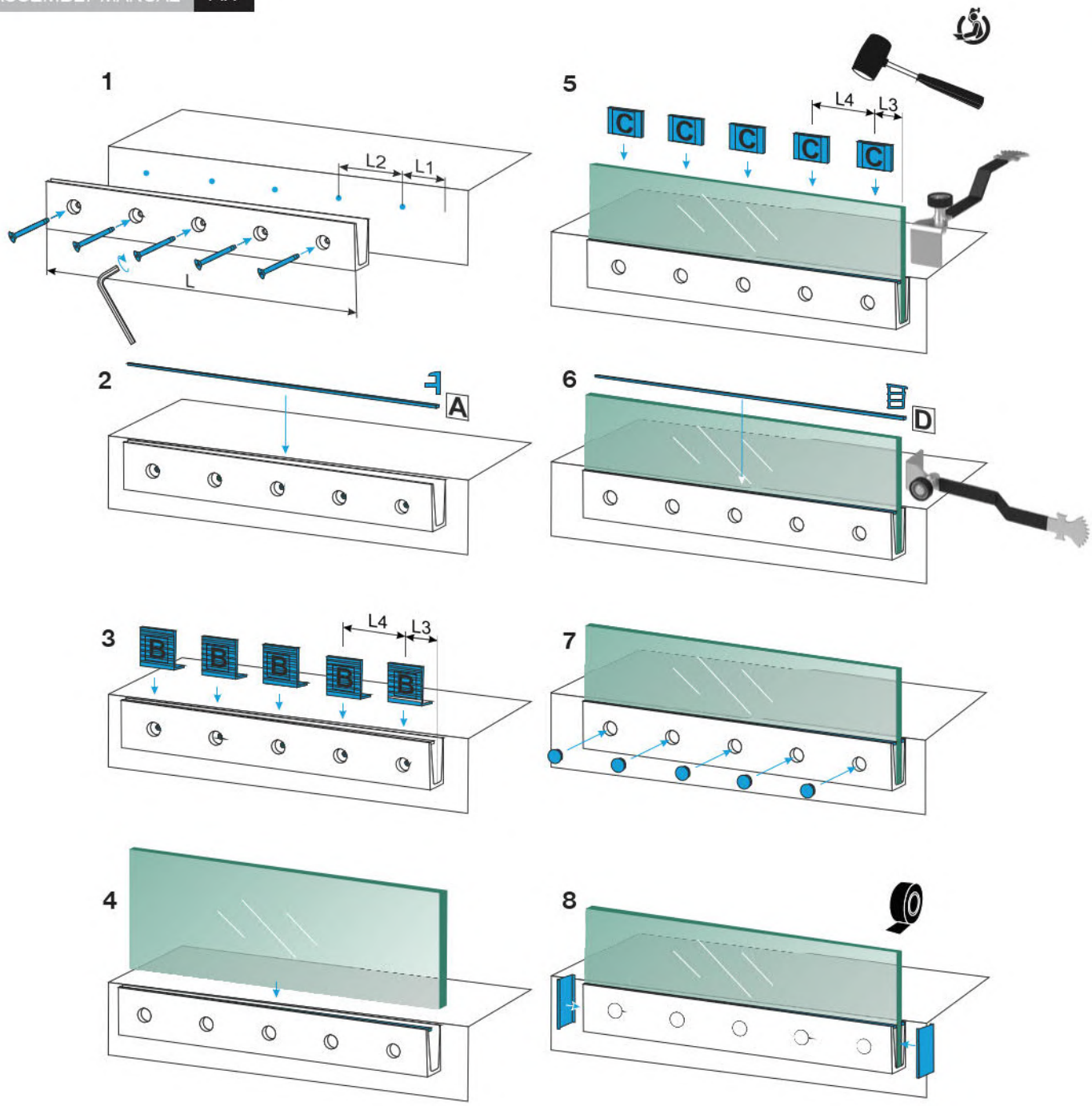

		L	L1	L2	L3	L4
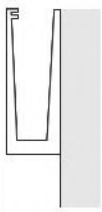	AL/0005-...	1250	125	250	125	250
		2500				
		5000				
		6000				
	AL/0009-...	2500		150		
		5000				
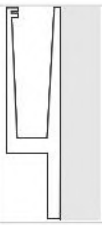	AL/0011-...	1250		200		
		2500	50			
		5000	100			
		6000				

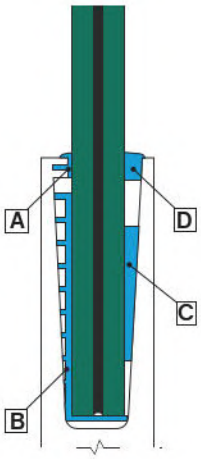

1

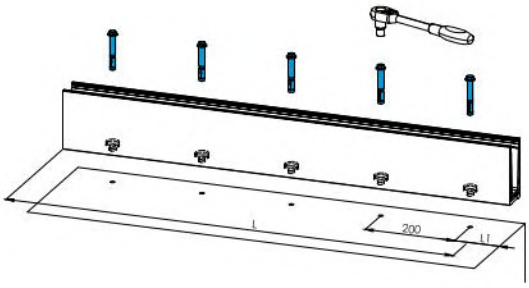

2

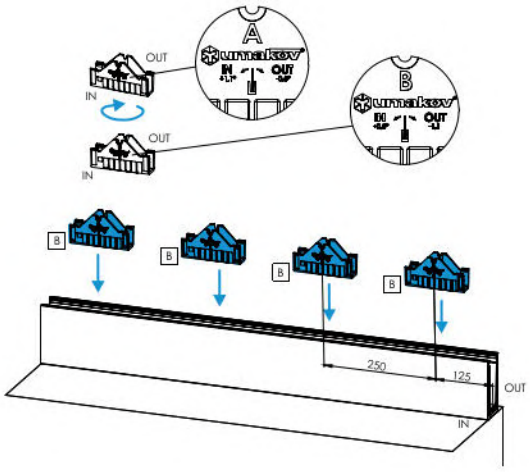

3

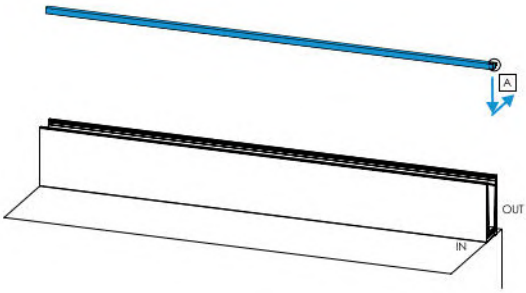

4

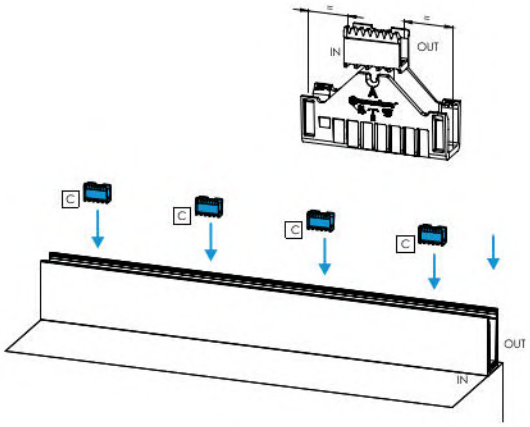

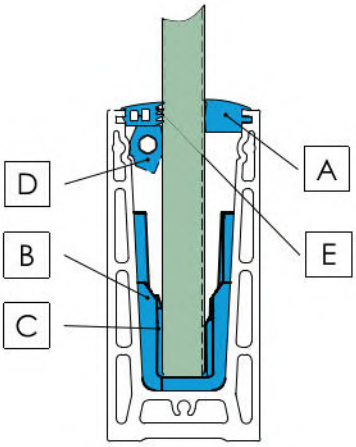

		L	L1
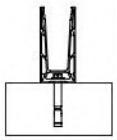	AL/0004-LIGHT...	2500	50
		5000	100
	AL/0004-PRO...	2500	50
		5000	100
		6000	
	AL/0011-PRO...	2500	50
		5000	100

5

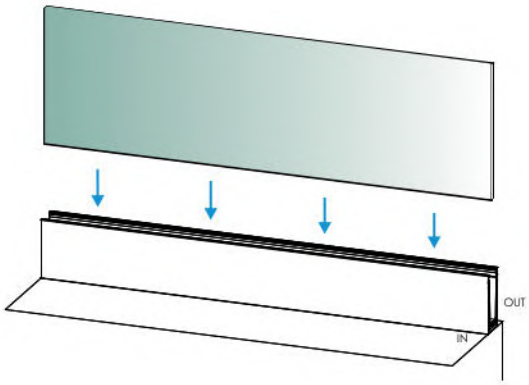

6

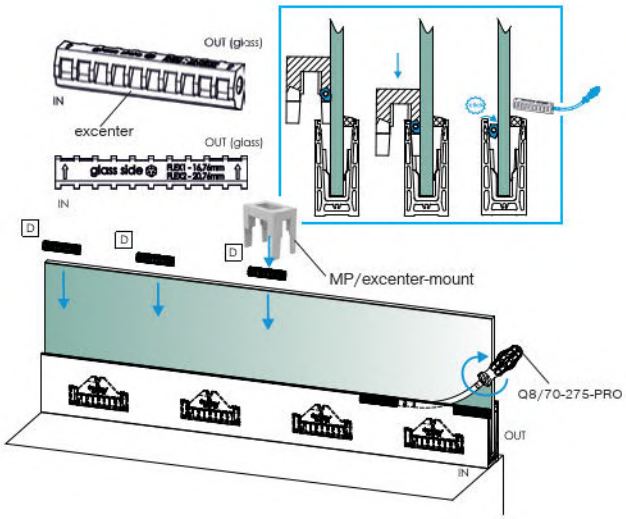

7

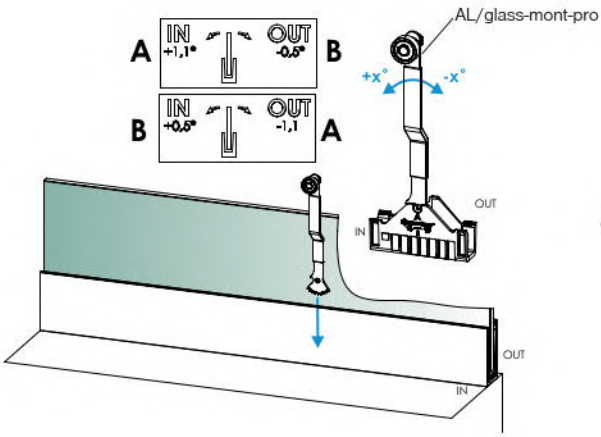

8

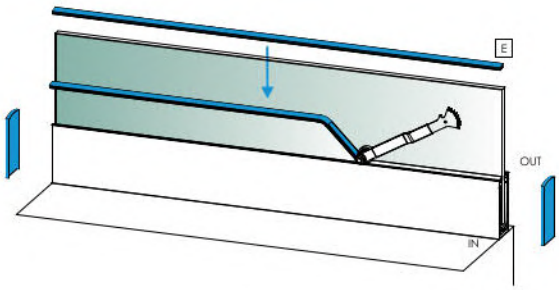

		L	L1
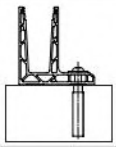	AL/0006-UNO...	2500	50
		5000	100
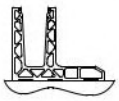	AL/0018...	2500	50
		5000	100
	AL/0019...	2500	50
		5000	100

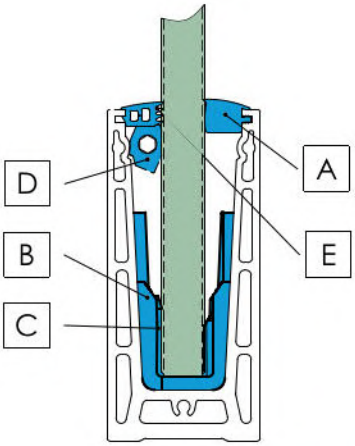

	art.	h	L	glass t
	AL/ZALVR100-2500-004	1000	2500	16,76 VSG/ESG

	art.	h	L	glass t
	AL/ZALVR100-2500-006	1000	2500	16,76 VSG/ESG

	art.	h	L	glass t
	AL/ZALBR100-2500-005	1000	2500	16,76 VSG/ESG

	art.	h	L	glass t
	AL/ZALBR100-2500-011	1000	2500	16,76 VSG/ESG

GLASS... VSG ESG 12,76/16,76

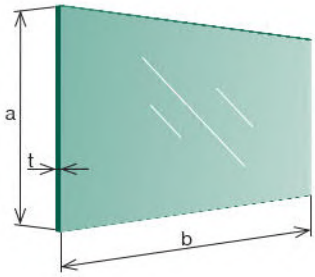

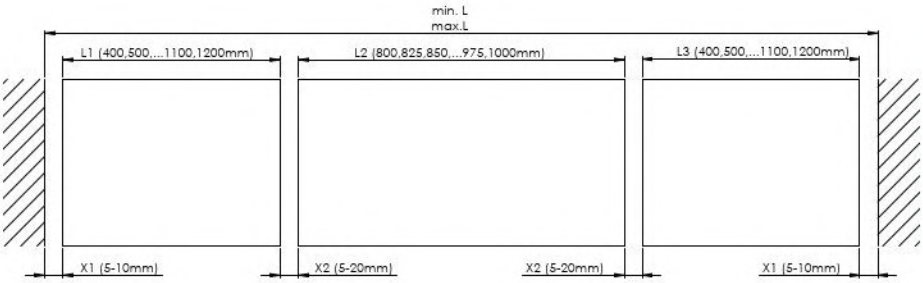

Glass balustrade configurator
(for glass t=16,76, height 1000/1100/1200 mm)

2-fields (gap X=15-40mm (X1=5-10mm, X2=5-20mm))

handrail length L (mm)	glass length L1, L2(mm)														
	400	500	600	700	800	825	850	875	900	925	950	975	1000	1100	1200
min.1215	1				1										
1600/1				1				1							
1600/2			1									1			
1825									2						
1875									1		1				
2000/1												1	1		
2000/2								1						1	
max.2240													1		1

3-fields (gap X=20-50mm (X1=5mm, X2=5-20mm))

handrail length L (mm)	glass length L1, L2, L3(mm)														
	400	500	600	700	800	825	850	875	900	925	950	975	1000	1100	1200
min.1620	2				1										
2200/1			2									1			
2200/2			1	1				1							
2525					2				1						
2575					2						1				
3225					1										2
3275							1								2
max.3450													1		2

4-fields (gap X=25-70mm (X1=5mm, X2=5-20mm))

handrail length L (mm)	glass length L1, L2, L3, L4(mm)														
	400	500	600	700	800	825	850	875	900	925	950	975	1000	1100	1200
min.2425	2				2										
3200/1				2				2							
3200/2			2									2			
3825								1	1				2		
3875									1	1			2		
4225								1	1						2
4275									1	1					2
max.4470													2		2

5-fields (gap X=30-90mm (X1=5mm, X2=5-20mm))

handrail length L (mm)	glass length L1, L2, L3, L4, L5(mm)														
	400	500	600	700	800	825	850	875	900	925	950	975	1000	1100	1200
min.2430	4				1										
3800/1				4						1					
3800/2			2		2					1					
4825									2		1		2		
4875									2				3		
5225											1		2	2	
5275													3	2	
max.5890													1		4

Quality	art.	t	a	b
VSG/ ESG 6.6.2	GS/12,76-100x60-VSG/ESG	12,76	1000	600
	GS/12,76-100x70-VSG/ESG			700
	GS/12,76-100x80-VSG/ESG			800
	GS/12,76-100x90-VSG/ESG			900
	GS/12,76-100x95-VSG/ESG			950
	GS/12,76-100x100-VSG/ESG			1000
	GS/12,76-110x60-VSG/ESG		1100	600
	GS/12,76-110x70-VSG/ESG			700
	GS/12,76-110x80-VSG/ESG			800
	GS/12,76-110x90-VSG/ESG			900
	GS/12,76-110x95-VSG/ESG			950
	GS/12,76-110x100-VSG/ESG			1000
VSG/ ESG 8.8.2	GS/16,76-100x40-VSG/ESG	16,76	1000	400
	GS/16,76-100x50-VSG/ESG			500
	GS/16,76-100x60-VSG/ESG			600
	GS/16,76-100x70-VSG/ESG			700
	GS/16,76-100x80-VSG/ESG			800
	GS/16,76-100x82,5-VSG/ESG			825
	GS/16,76-100x85-VSG/ESG			850
	GS/16,76-100x87,5-VSG/ESG			875
	GS/16,76-100x90-VSG/ESG			900
	GS/16,76-100x92,5-VSG/ESG			925
	GS/16,76-100x95-VSG/ESG			950
	GS/16,76-100x97,5-VSG/ESG			975
	GS/16,76-100x100-VSG/ESG			1000
	GS/16,76-110x40-VSG/ESG		1100	400
	GS/16,76-110x50-VSG/ESG			500
	GS/16,76-110x60-VSG/ESG			600
	GS/16,76-110x70-VSG/ESG			700
	GS/16,76-110x80-VSG/ESG			800
	GS/16,76-110x82,5-VSG/ESG			825
	GS/16,76-110x85-VSG/ESG			850
	GS/16,76-110x87,5-VSG/ESG			875
	GS/16,76-110x90-VSG/ESG			900
	GS/16,76-110x92,5-VSG/ESG			925
	GS/16,76-110x95-VSG/ESG			950
	GS/16,76-110x97,5-VSG/ESG			975
	GS/16,76-110x100-VSG/ESG			1000
	GS/16,76-110x110-VSG/ESG			1100
	GS/16,76-120x40-VSG/ESG		1200	400
	GS/16,76-120x50-VSG/ESG			500
	GS/16,76-120x60-VSG/ESG			600
	GS/16,76-120x70-VSG/ESG			700
	GS/16,76-120x80-VSG/ESG			800
	GS/16,76-120x82,5-VSG/ESG			825
	GS/16,76-120x85-VSG/ESG			850
	GS/16,76-120x87,5-VSG/ESG			875
	GS/16,76-120x90-VSG/ESG			900
	GS/16,76-120x92,5-VSG/ESG			925
	GS/16,76-120x95-VSG/ESG			950
	GS/16,76-120x97,5-VSG/ESG			975
	GS/16,76-120x100-VSG/ESG			1000
	GS/16,76-120x110-VSG/ESG			1100
	GS/16,76-120x120-VSG/ESG			1200
VSG/ ESG 8.8.4	GS/17,52-110x80-VSG/ESG	17,52	1100	800
	GS/17,52-110x82,5-VSG/ESG			825
	GS/17,52-110x85-VSG/ESG			850
	GS/17,52-110x87,5-VSG/ESG			875
	GS/17,52-110x90-VSG/ESG			900
	GS/17,52-110x92,5-VSG/ESG			925
	GS/17,52-110x95-VSG/ESG			950
	GS/17,52-110x97,5-VSG/ESG			975
	GS/17,52-110x100-VSG/ESG			1000
	GS/17,52-110x110-VSG/ESG			1100
	GS/17,52-110x120-VSG/ESG			1200
	GS/17,52-110x130-VSG/ESG			1300
	GS/17,52-110x140-VSG/ESG			1400
	GS/17,52-110x150-VSG/ESG			1500

VSG Glass	4.4.1	4.4.2	5.5.1	5.5.2	6.6.1	6.6.2	8.8.2	8.8.4	8.8.8.2.2
t1	2x4	2x4	2x5	2x5	2x6	2x6	2x8	2x8	3x8
t2	0,38	0,76	0,38	0,76	0,38	0,76	0,76	1,52	2x0,76
t	8,38	8,76	10,38	10,76	12,38	12,76	16,76	17,52	25,52

Glass	FLOAT, ESG								
t1 (mm)	3	4	5	6	8	10	12	15	19
Tolerance (± mm)	0,2	0,2	0,2	0,2	0,3	0,3	0,3	0,5	1,0
Weight (kg/m²)	7,5	10	12,5	15	20	25	30	37,5	47,5

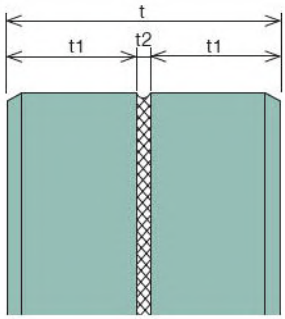

2 GLASS ADAPTERS

ROUND MODELS

FLEX

FIX

SQUARE MODELS

FIX

DOUBLE ADAPTERS

GLASS

SETS

MODEL FLEX

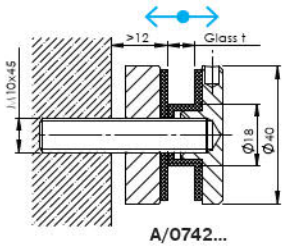

A/0742...

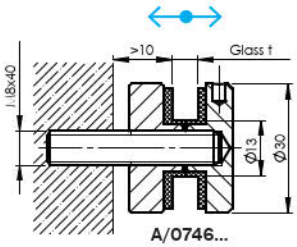

A/0746...

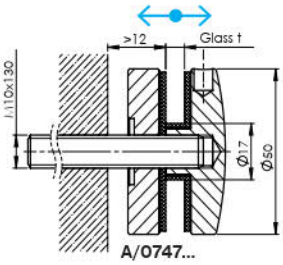

A/0747...

Quality	Finish	∅	art.	glass t	glass hole
AISI304	satin	flat	A/0742-FLEX1	8-17,52	20
			A/0746-FLEX1-B	6-12,76	15
			A/0747-FLEX1-B	8-17,52	20

A/0747-FLEX2
A14/0747-FLEX2

A-PVD/0747-FLEX2

A-PVD/0747-FLEX2-L

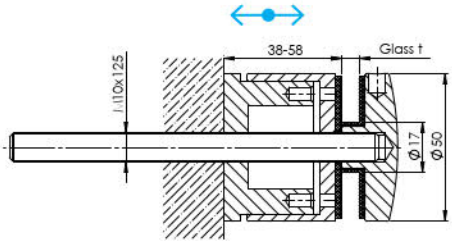

Quality	Finish	∅	art.	glass t	glass hole	
AISI304	satin	flat	A/0747-FLEX2	8-17,52	20	new
	PVD black		A-PVD/0747-FLEX2			
	PVD black-polish		A-PVD/0747-FLEX2-L			
AISI316	satin		A14/0747-FLEX2			

A-BLACK/0747-501 FLEX2

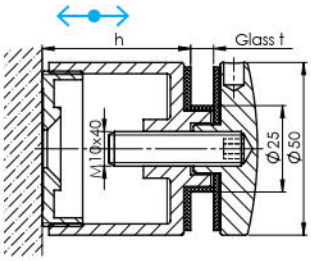

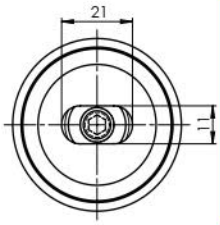

Quality	Finish	∅	art.	h	glass t	glass hole	
AISI304	satin	flat	A/0747-501 FLEX2	42-47	8-17,52	30	
	BLACK RAL9005		A-BL/0747-501 FLEX2				new
	BLACK RAL9004		A-BLACK/0747-501 FLEX2				new
	satin		A/0747-502 FLEX2	32-37			
			A/0747-503 FLEX2	52-57			

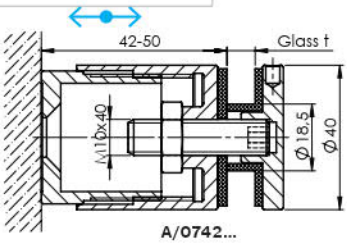

A/0742...

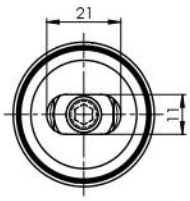

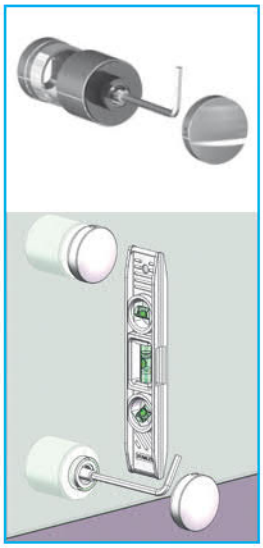

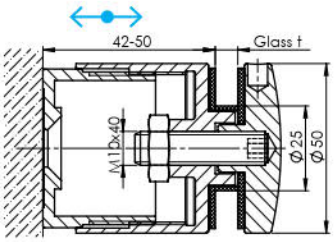

A/0747...

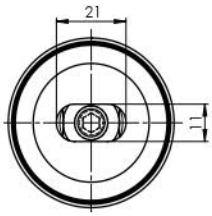

Quality	Finish	∅	art.	glass t	glass hole
AISI304	satin	flat	A/0742-FLEX3	8-17,52	22
			A/0747-FLEX3		30
AISI316			A14/0747-FLEX3		
	polish		A14/0747-FLEX3-L		

A-BL/0747-000
A-BLACK/0747-000
A-PVD/0747-000

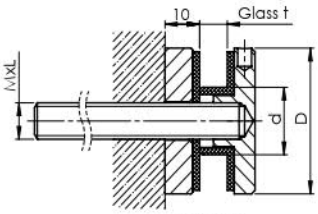

A/0742...
A/0749...

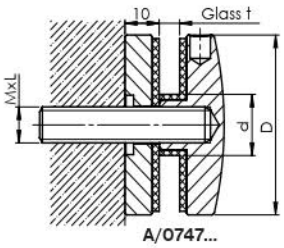

A/0747...
A/0748...
ZN/0747...

Quality	Finish	∅	art.	D	MxL	glass t	d	glass hole	
AISI304	satin	flat	A/0742-000	40	M10x100	8-17,52	18,5	22	
			A/0747-000-S	50	M8x45		17	20	
			A/0747-000	50	M10x45				top
	PVD black		A-PVD/0747-000						new
	BLACK RAL9005		A-BL/0747-000						new
	BLACK RAL9004		A-BLACK/0747-000						new
	RAL9004		A/0749-000	60	M10x100		18		
			A/0748-000	70					
	polish		A/0747-000-L	50	M10x45		17		
AISI316	satin		A14/0747-000						
			A14/0747-000-S		M8x45				
ZAMAK	raw		ZN/0747-000		M10x45				

A-BLACK/0746-000

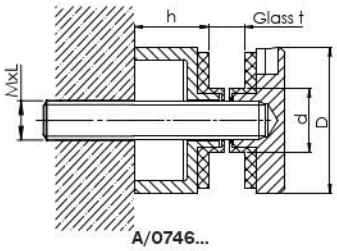

A/0746...
ZN/0746...

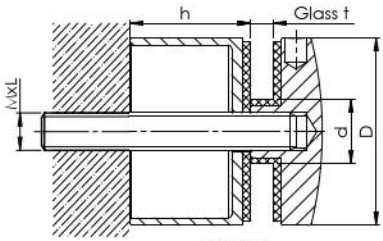

A/0747...

Quality	Finish	∅	art.	D	h	MxL	glass t	d	glass hole	
AISI304	satin	flat	A/0746-000	30	15	M8x40	6-12,76	13	15	new
	BLACK RAL9004		A-BLACK/0746-000							
	satin		A/0746-300		32	M8x80				
			A/0746-400		42					
			A/0746-500		52	M8x100				
			A/0747-200	50	22	M10x70	8-17,52	17	20	
			A/0747-300		32					
			A/0747-400		42	M10x90				
			A/0747-500		52					
	polish		A/0746-000-L	30	15	M8x40	6-12,76	13	15	
AISI316	satin		A14/0746-000							
			A14/0747-300	50	32	M10x70	8-17,52	18	20	
ZAMAK	raw		ZN/0746-000	30	15	M8x40	6-12,76	13	15	

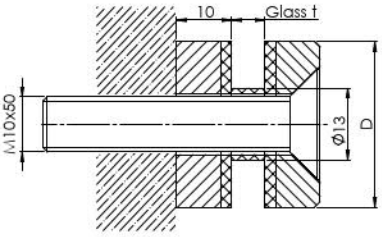

Quality	Finish	∅	art.	D	glass t	glass hole
AISI304	satin	flat	A/0763-000	30	6-12,76	15
			A/0764-000	40	8-17,52	
AISI316			A14/0763-000	30	6-12,76	
			A14/0764-000	40	8-17,52	

PVD

RAL LINE UMAKOV

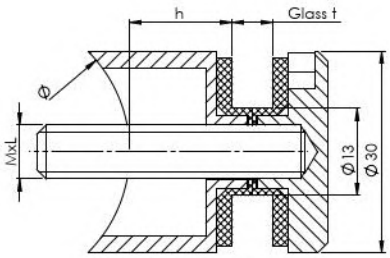

A/0746...

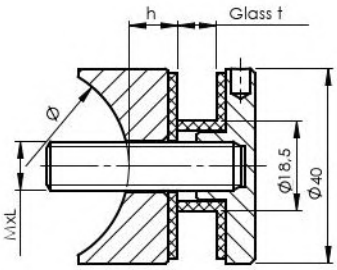

A/0742...

Quality	Finish	∅	art.	h	MxL	glass t	glass hole
AISI304	satin	33,7	A/0746-033	13	M8x50	6-12,76	15
		42,4	A/0746-042	15	M8x40		
AISI316			A14/0746-042	15	M8x40		
AISI304			A/0742-042	10	M10X40	8-17,52	22

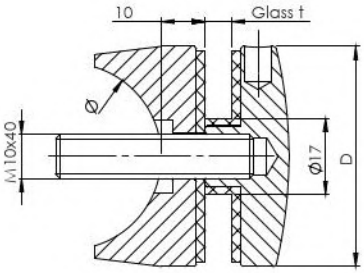

A/0747...
A/0748...
A14/0747...

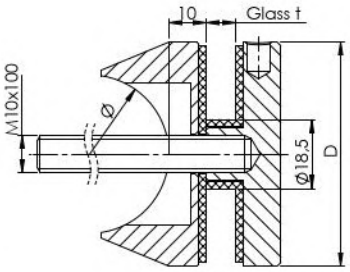

A/0749...

Quality	Finish	∅	art.	D	glass t	glass hole
AISI304	satin	42,4	A/0747-242	50	8-17,52	20
			A/0749-042	60		22
			A/0748-242	70		20
AISI316			A14/0747-242	50		

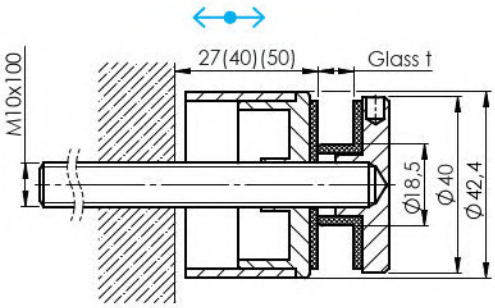

Quality	Finish	∅	art.	glass t	glass hole
AISI304	satin	flat	A/0742-FLEX	8-17,52	22

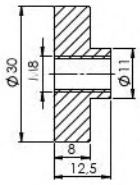

Quality	Finish	art.
AISI304	satin	A/0746-plate

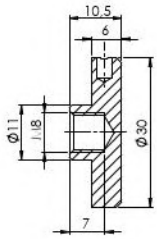

Quality	Finish	art.
AISI304	satin	A/0746-front

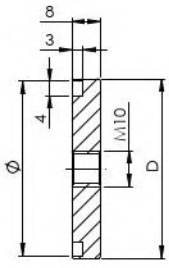

A/0747-plate

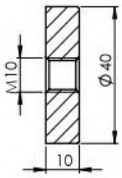

A/0742-plate

Quality	Finish	art.	D	Ø
AISI304	satin	A/0742-plate	40	38,7
		A/0747-plate	50	48,7

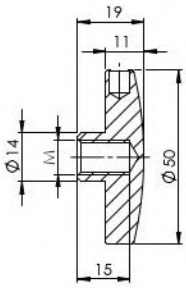

Quality	Finish	art.	M
AISI304	satin	A/0747-front	10
		A/0747-S-front	8

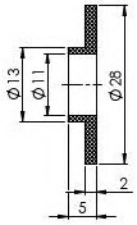

Quality	Finish	art.	Compatibility
Rubber	black	A19/46-Black	A/0746-...
	white	A19/46-White	

A19/47-Black

A19/47-1-White

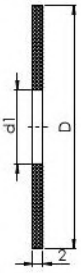

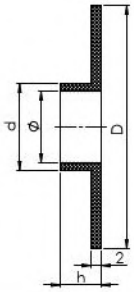

Quality	Finish	art.	D	h	d	d1	Ø	Compatibility
Rubber	black	A19/47-Black	48	8	17	10,5	14	A/0747-...
		A19/47-1-Black			25	14,5	22	
		A19/42-Black	38	6	18,5	10,5	14,5	A/0742-...
	white	A19/47-White	48	8	17		14	A/0747-...
		A19/47-1-White			25	14,5	22	

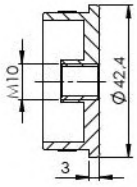

Quality	Finish	art.
AISI304	satin	A/5736-242-M10

A/...-000

A/...-042

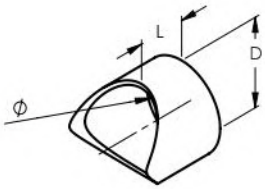

Quality	Finish	Ø	D	art.	L
AISI304	satin	flat	33,7x2	A/33,7x2-22-000	22
			42,4x2	A/42,4x2-22-000	
				A/42,4x2-35-000	35
				A/42,4x2-45-000	45
		42,4	33,7x2	A/33,7x2-22-042	22
			42,4x2	A/42,4x2-22-042	

new

MODEL FLEX

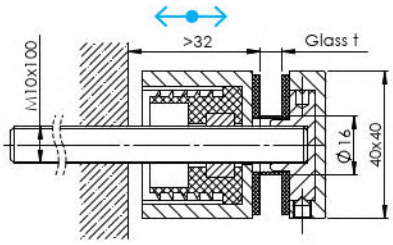

Quality	Finish	∅	art.	glass t	glass hole
AISI304	satin	flat	A/0745-300-FLEX1	8-17,52	18

MODEL FIX

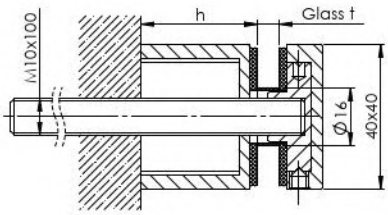

Quality	Finish	∅	art.	h	glass t	glass hole
AISI304	satin	flat	A/0745-300	32	8-17,52	18
			A/0745-500	52		

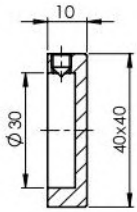

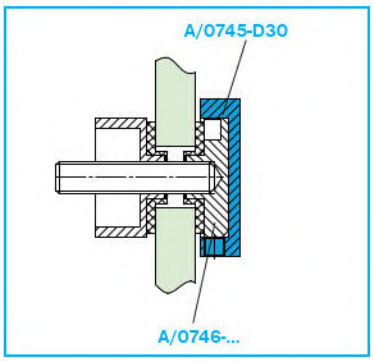

Quality	Finish	art.
AISI304	satin	A/0745-D30

GLASS... VSG ESG 16,76

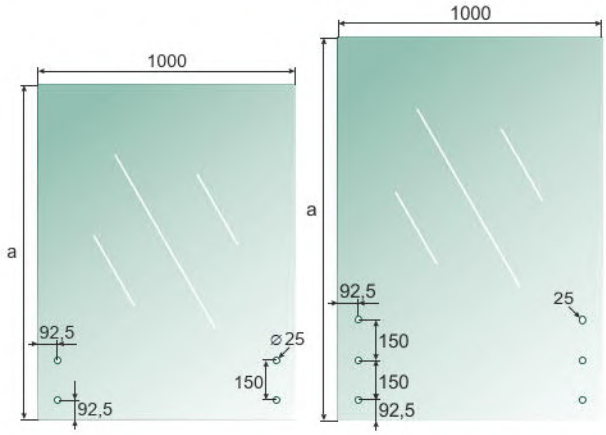

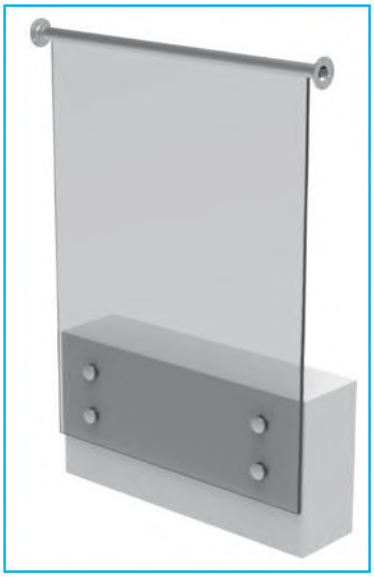

Quality	art.	a	glass t	holes
VSG/ESG	GS/16,76-98x100-VSG/ESG	980	16,76	4
	GS/16,76-133x100-VSG/ESG	1330		
	GS/16,76-108x100-VSG/ESG	1080		6
	GS/16,76-143x100-VSG/ESG	1430		

MODEL **FIX**

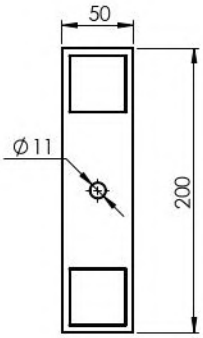

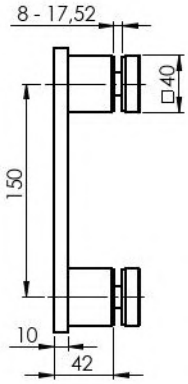

Quality	Finish	art.	glass hole
AISI304	satin	A/2740-000	18

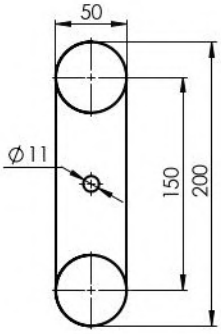

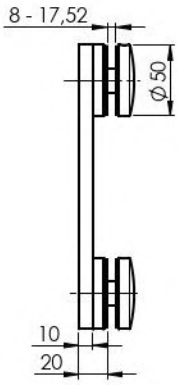

Quality	Finish	art.	glass hole
AISI304	satin	A/2747-000	20

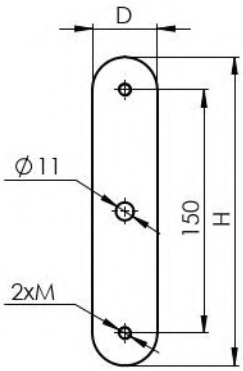

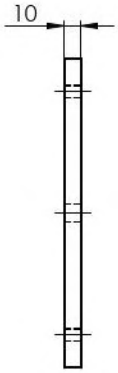

Quality	Finish	art.	D	H	M
AISI304	satin	A/2746-000 plate T10mm	40	190	8
		A/2747-000 plate T10mm	50	200	10

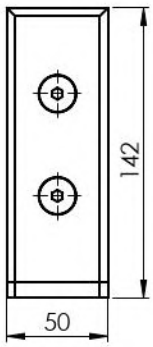

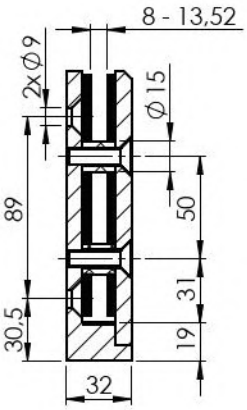

Quality	Finish	art.	glass hole
AISI316	satin	A14/3000-000	18

3 SPIGOTS

ROUND MODELS
FLEX
FIX

ELIPSE MODELS
FLEX

SQUARE MODELS
FLEX
FIX

POST MODELS
GLASS

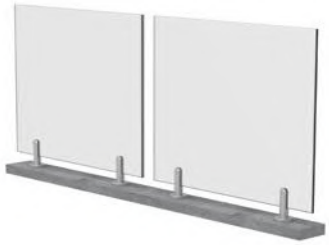

SETS

MODEL 6100

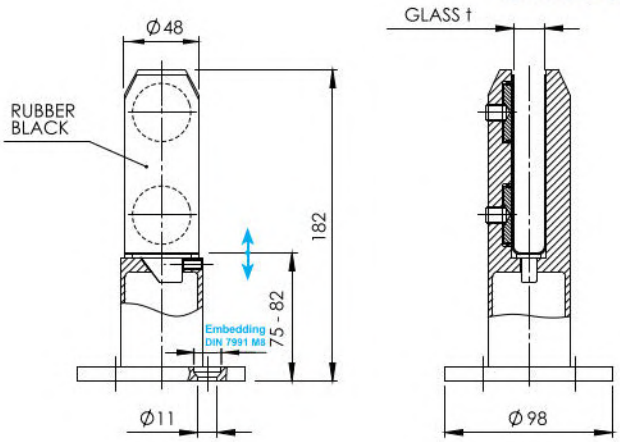

Quality	Finish	art.	G/h	pcs/m	Glass t
AISI304	satin	A/6100-000-B	0,5kN	3	12-17,52
AISI316	satin	A14/6100-000-B			
AISI316	polish	A14/6100-000-B-L			

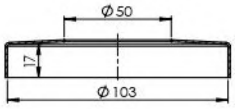

Quality	Finish	art.
AISI304	satin	A/0512-050
AISI316	satin	A14/0512-050

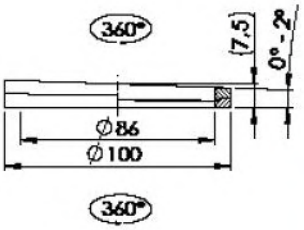

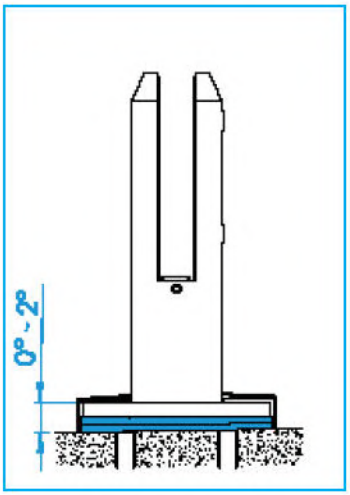

Quality	Finish	art.
AISI304	natural	Q10/ANGLE-0-2-100

new

MODEL 6500

A/6500-000

A-BLACK/6500-000

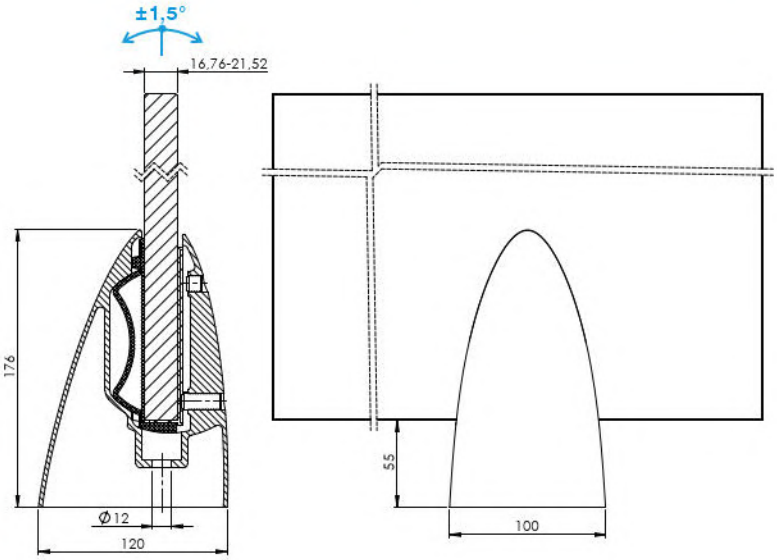

Quality	Finish	art.	G/h	pcs/m
AISI304	satin	A/6500-000	1kN	3
AISI304	BLACK RAL9005	A-BL/6500-000		

new

MODEL 6200

A14/6210-000

.../6200-000-C

A-BLACK/6200-000-C

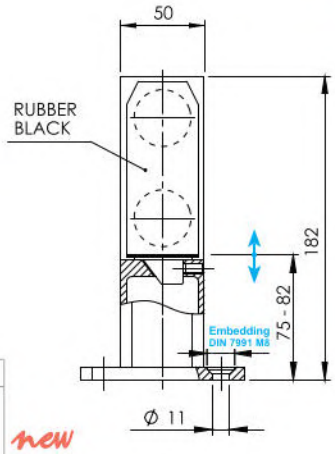

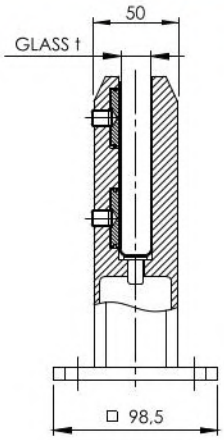

Quality	Finish	art.	G/h	pcs/m	Glass t
AISI304	satin	A/6200-000-C	0,5kN	3	12-17,52
	BLACK RAL9004	A-BLACK/6200-000-C			
AISI316	satin	A14/6200-000-C			
	polish	A14/6200-000-C-L			
	satin	A14/6210-000			
S.S.2205	satin	A22/6200-000-C	0,5kN 1kN	2 3	

new

new

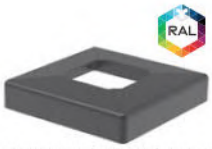

A14-BLACK/4511-050-B

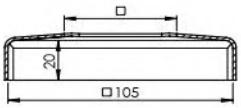

Quality	Finish	art.	⧄
AISI316	satin	A14/4511-050-B	51,5
	polish	A14/4511-050-B-L	
	BLACK RAL9004	A14-BLACK/4511-050-B	

new

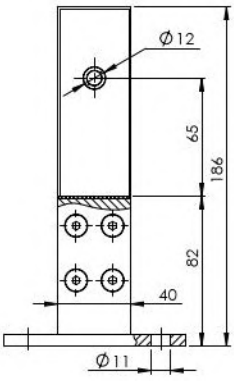

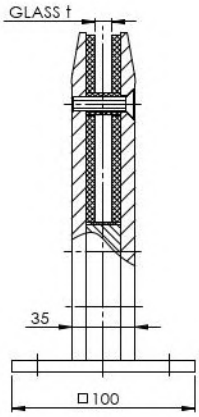

Quality	Finish	art.	G/h	pcs/m	Glass t	glass hole
AISI304	satin	A/6200-000-B	0,5kN	3	12-17,52	15

MODEL 6220

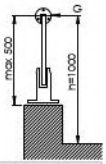

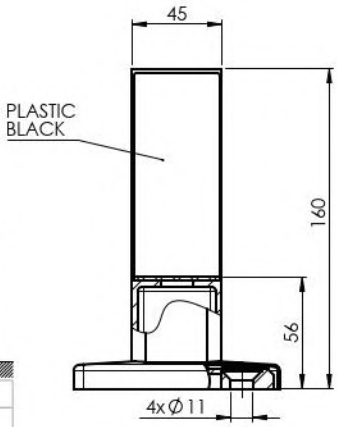

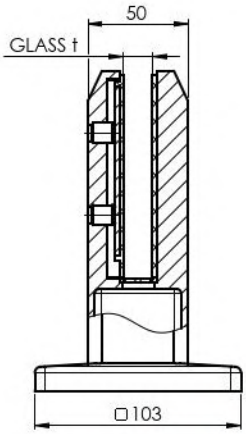

Quality	Finish	art.	G/h	pcs/m	Glass t
AISI316	satin	A14/6220-014	0,25kN*	3	12,0-13,5
		A14/6220-018			16,0-17,5

* for use only with anchored cap rail

GLASS 12,76/16,76 63

MODEL 6300

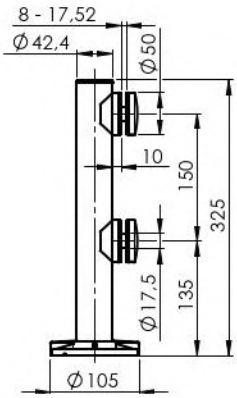

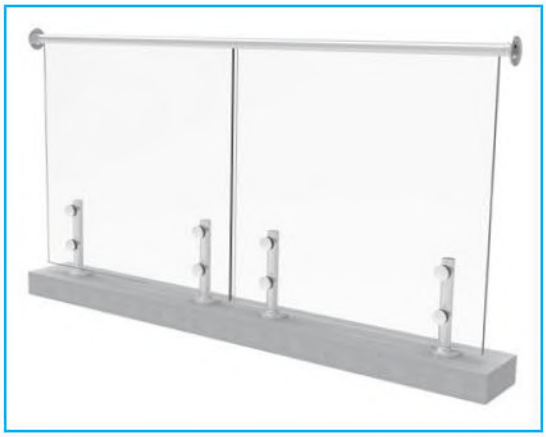

Quality	Finish	art.	Glass	Glass hole
AISI316	satin	A14/6300-000	GS/16,76-...	20

MODEL 6400

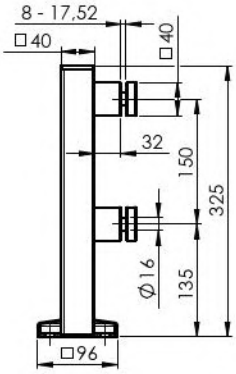

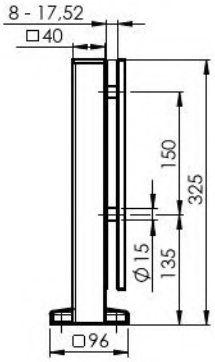

Quality	Finish	art.	Glass	Glass hole
AISI304	satin	A/6400-040	GS/16,76-...	20

Quality	Finish	art.	Glass	Glass hole
AISI304	satin	A/6400-040-plate	GS/16,76-...	20

GLASS... VSG ESG 16,76

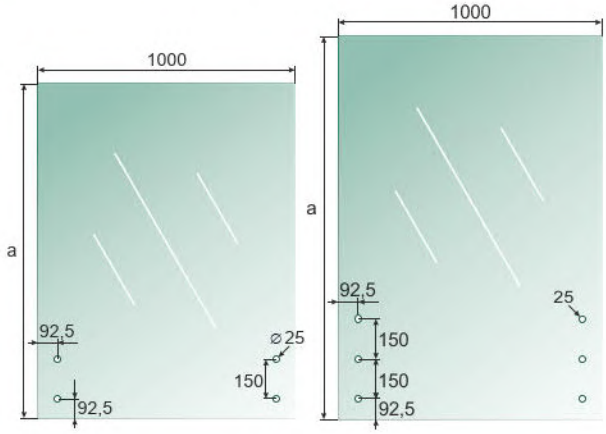

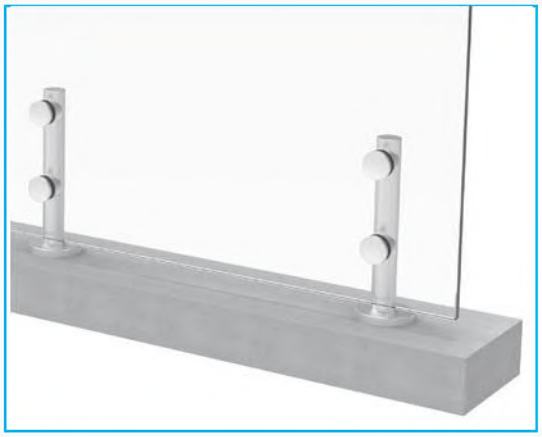

Quality	art.	a	glass t	holes
VSG/ESG	GS/16,76-98x100-VSG/ESG	980	16,76	4
	GS/16,76-133x100-VSG/ESG	1330		
	GS/16,76-108x100-VSG/ESG	1080		6
	GS/16,76-143x100-VSG/ESG	1430		

MODEL 6100 SET

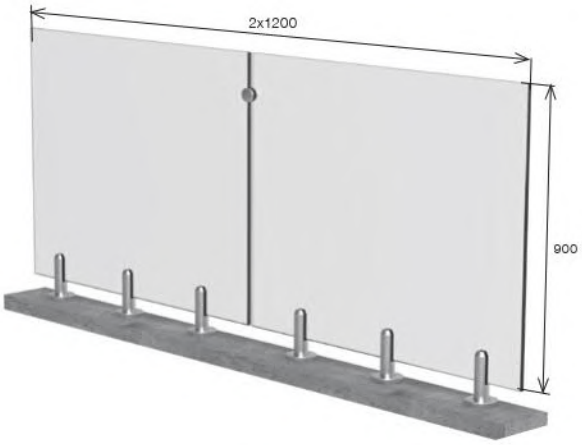

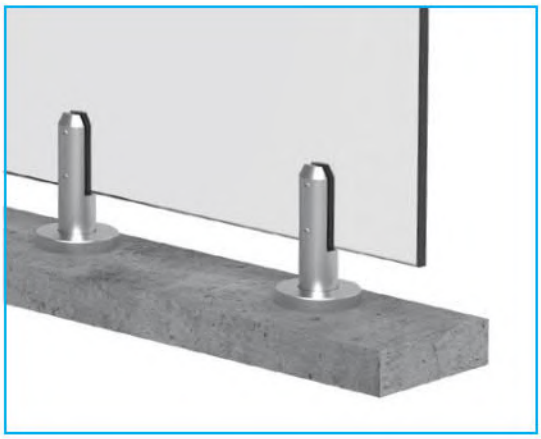

	art.	G/h	glass t
	GS/FRB8-120x100-6100-6	0,5kN	16,76 VSG/ESG

MODEL 6200 SET

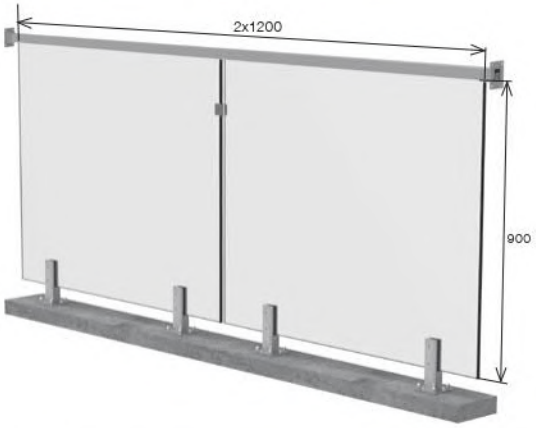

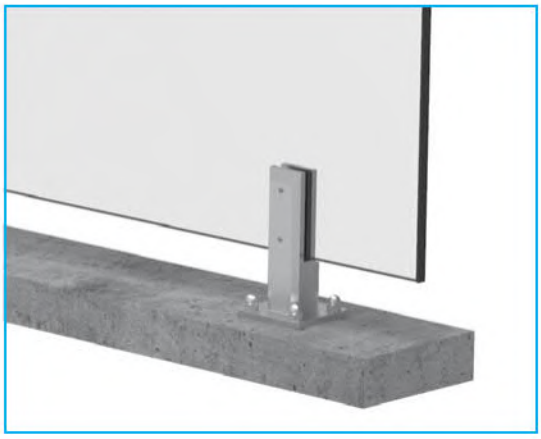

	art.	G/h	glass t
	GS/FRB-103x120-6200	0,5kN	16,76 VSG/ESG

* handrail is not included, but it is recommended in this SET.

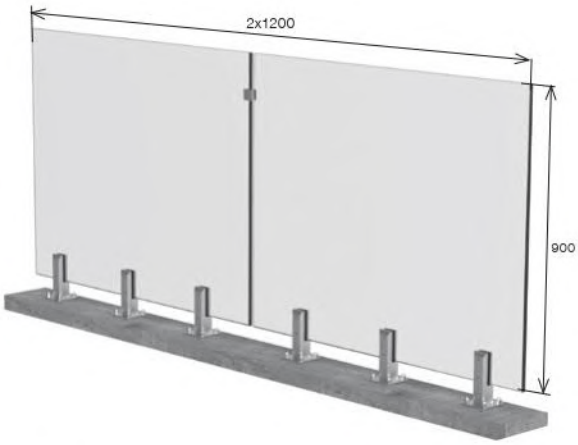

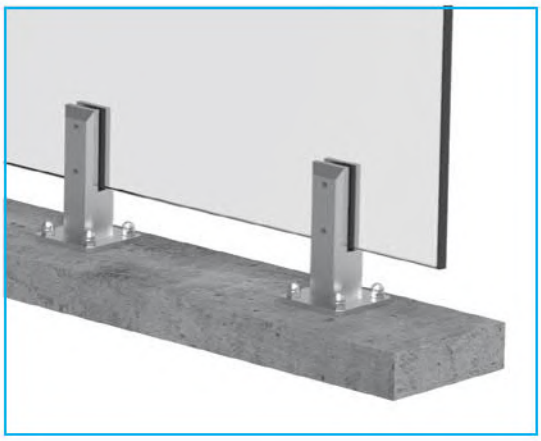

	art.	G/h	glass t
	GS/FRB8-120x100-6200-6	0,5kN	16,76 VSG/ESG

4

GLASS CONNECTORS
HANDRAIL HOLDERS FOR GLASS

GLASS CONNECTORS ROUND MODELS

GLASS CONNECTORS SQUARE MODELS

HANDRAIL HOLDERS FOR GLASS

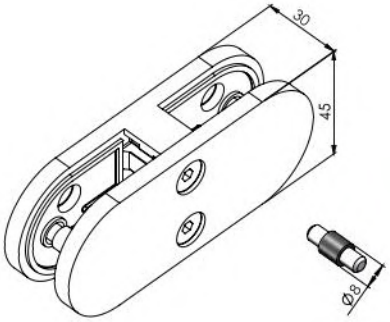

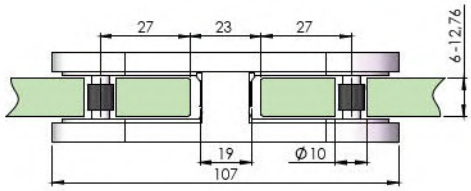

Quality	Finish	art.		A19/04-PVC	Test
AISI316	satin	A14/2500-700	1x		GAMIN

	glass t						
	6	8	8,76	10	10,76	12	12,76
	A19/25-006	A19/25-008	A19/25-009	A19/25-010	A19/25-011	A19/25-012	A19/25-013

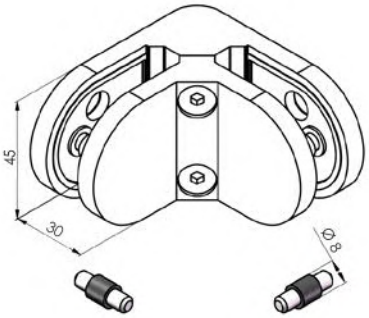

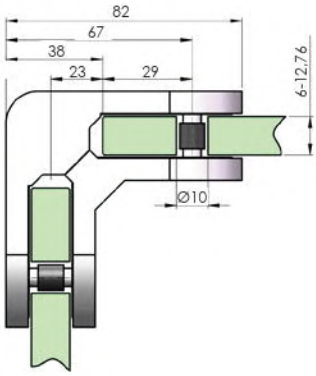

Quality	Finish	art.		A19/04-PVC	Test
AISI316	satin	A14/2500-900	1x		GAMIN

	glass t						
	6	8	8,76	10	10,76	12	12,76
	A19/25-006	A19/25-008	A19/25-009	A19/25-010	A19/25-011	A19/25-012	A19/25-013

MODEL 0746

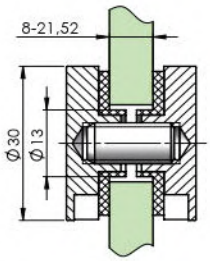

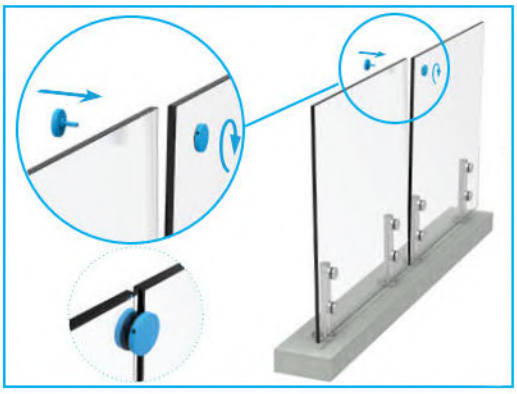

Quality	Finish	art.	glass hole	included	glass t
AISI304	satin	A/0746-SET	15	A-DIN 913-A2 M8x16 A-DIN 913-A2 M8x20 A-DIN 913-A2 M8x25 A-DIN 913-A2 M8x30	8-8,76 10-12,76 13,52-17,52 20,76-21,52

MODEL 0747

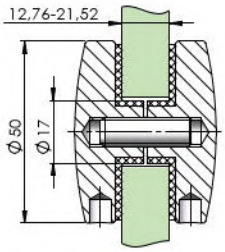

Quality	Finish	art.	glass hole
AISI304	satin	A/0747-S-SET	20

MODEL 230P

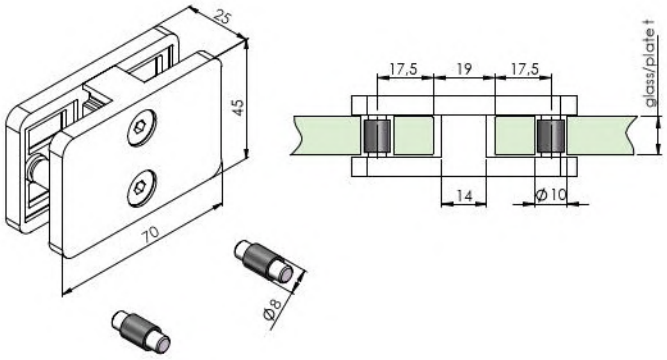

Quality	Finish	art.		A19/04-PVC	Test
AISI316	satin	A14/230P-700	1x		GAMIN

glass t							
6	6,76	8	8,76	10	10,76	12	12,76
A19/23-P06/K08	A19/23-P07/K09	A19/23-P08/K10	A19/23-P09/K11	A19/23-P10/K12	A19/23-P11/K13	A19/23-P12	A19/23-P13

plate t				
1,5	2	3	4	5
A19/23-P1,5/K3,5	A19/23-P02/K04	A19/23-P03/K05	A19/23-P04/K06	A19/23-P05/K07

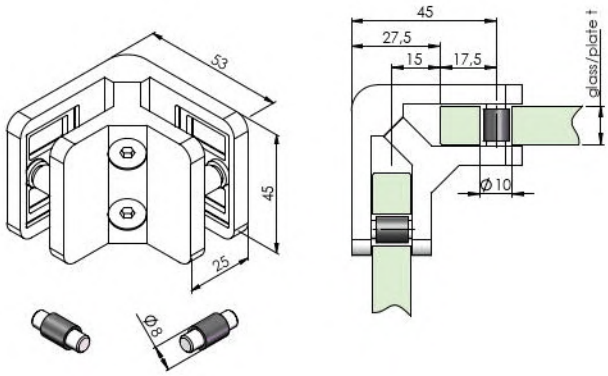

Quality	Finish	art.		A19/04-PVC	Test
AISI316	satin	A14/230P-900	1x		GAMIN

glass t							
6	6,76	8	8,76	10	10,76	12	12,76
A19/23-P06/K08	A19/23-P07/K09	A19/23-P08/K10	A19/23-P09/K11	A19/23-P10/K12	A19/23-P11/K13	A19/23-P12	A19/23-P13

plate t				
1,5	2	3	4	5
A19/23-P1,5/K3,5	A19/23-P02/K04	A19/23-P03/K05	A19/23-P04/K06	A19/23-P05/K07

MODEL 0745

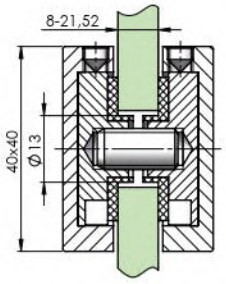

Quality	Finish	art.	glass hole	included	glass t
AISI304	satin	A/0745-SET	15	A-DIN 913-A2 M8x16 A-DIN 913-A2 M8x20 A-DIN 913-A2 M8x25 A-DIN 913-A2 M8x30	8-8,76 10-12,76 13,52-17,52 20,76-21,52

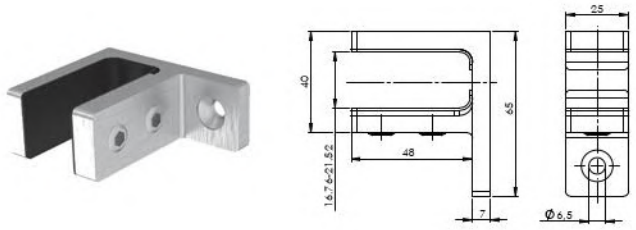

Quality	Finish	art.	glass t
AISI316	satin	A14/0771-000	16,76 - 21,52

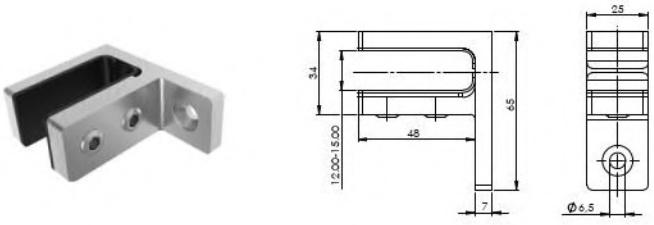

Quality	Finish	art.	glass t
AISI316	satin	A14/0771-015	12 - 15

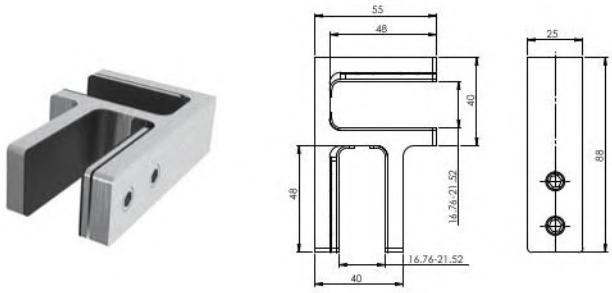

Quality	Finish	art.	glass t
AISI316	satin	A14/0773-000	16,76 - 21,52

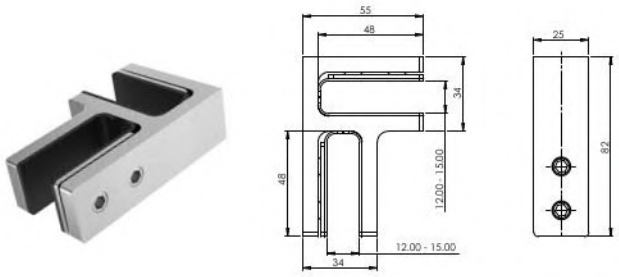

Quality	Finish	art.	glass t
AISI316	satin	A14/0773-015	12 - 15

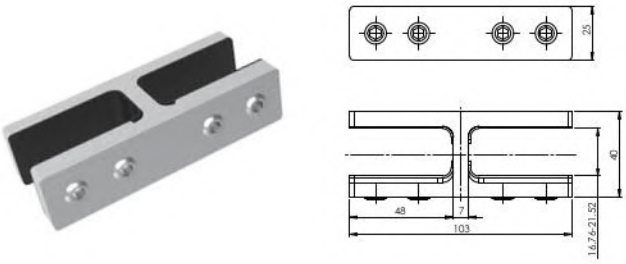

Quality	Finish	art.	glass t
AISI316	satin	A14/0772-000	16,76 - 21,52

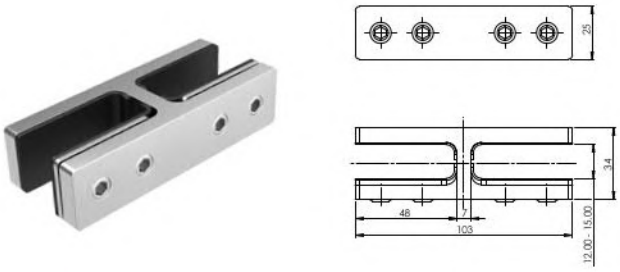

Quality	Finish	art.	glass t
AISI316	satin	A14/0772-015	12 - 15

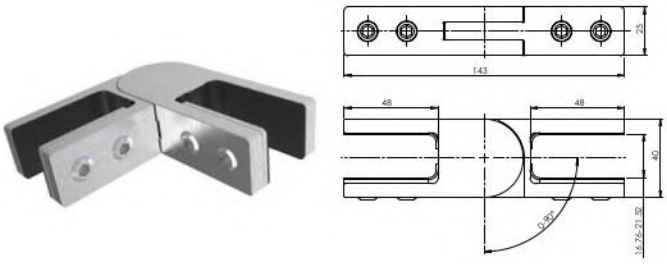

Quality	Finish	art.	glass t
AISI316	satin	A14/0774-000	16,76 - 21,52

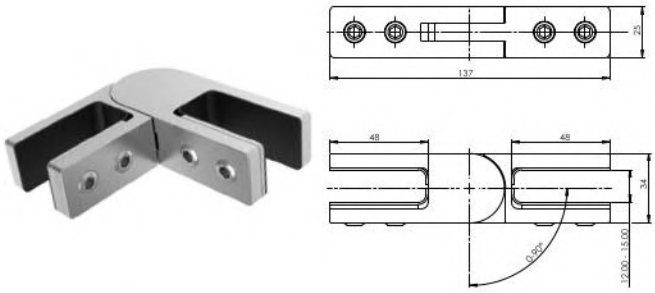

Quality	Finish	art.	glass t
AISI316	satin	A14/0774-015	12 - 15

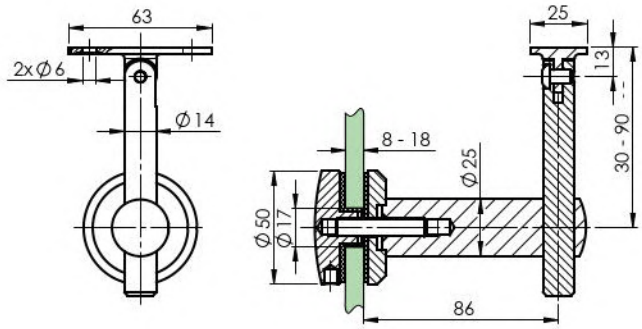

Quality	Finish	art.	Glass hole
AISI304	satin	A/0155-000	20

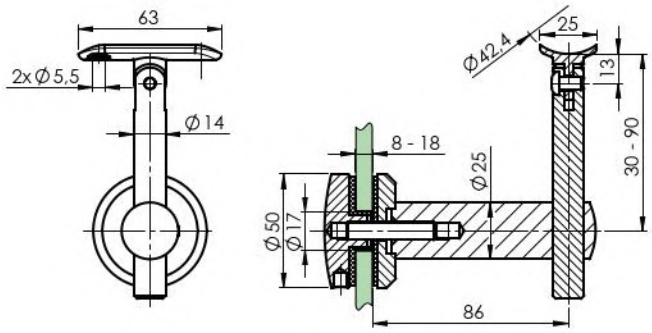

Quality	Finish	art.	Glass hole
AISI304	satin	A/0155-042-B	20
AISI316		A14/0155-042	

top

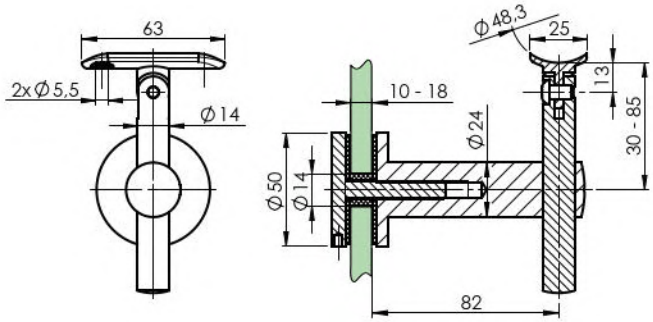

Quality	Finish	art.	Glass hole
AISI316	satin	A14/0155-048	20

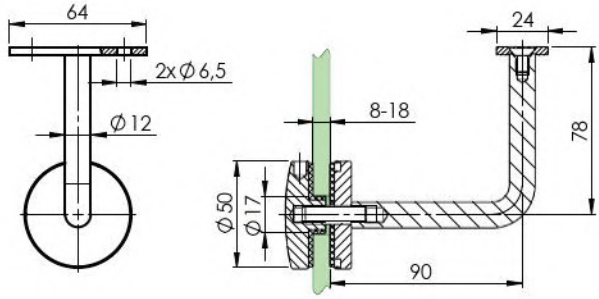

Quality	Finish	art.	Glass hole
AISI304	satin	A/0156-000	20

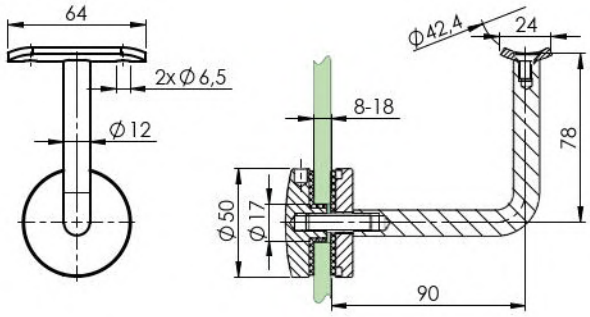

Quality	Finish	art.	Glass hole
AISI304	satin	A/0156-042	20

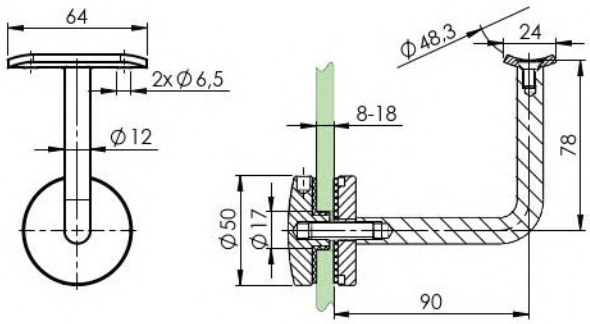

Quality	Finish	art.	Glass hole
AISI304	satin	A/0156-048	20

5 CAP RAILS

ROUND MODELS
LED

SQUARE MODELS

CAP RAIL RUBBERS

CAP RAIL FITTINGS
END CAPS

MODEL 42,4x1,5

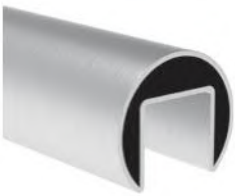

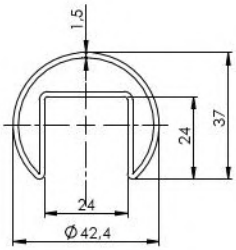

EPDM - exterior

PVC-P - interier

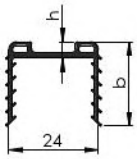

Quality	Finish	art.	L
AISI304	satin	A/6925-042-1250	1250
		A/6925-042	2500
		A/6920-042	5000
		A/6921-042	6000
AISI316		A14/6920-042	5000
	polish	A14/6920-042-L	5000

top

Quality	Finish	art.	Glass t	b	h	L
Rubber	black (exterier)	A19/5042-08-2500	8,0-11,0	22	5	2500
		A19/5042-08-5000				5000
		A19/5042-08-6000				6000
		A19/5042-11-2500	11,5-13,5	25	4,5	2500
		A19/5042-11-5000				5000
		A19/5042-11-6000				6000
		A19/5042-16-2500	16,0-17,5	21,5	4,2	2500
		A19/5042-16-5000				5000
		A19/5042-16-6000				6000
		A19/5042-16-30000				30000
		A19/5042-21-2500	20,76-21,52	24	3,5	2500
		A19/5042-21-5000				5000
		A19/5042-21-6000				6000
Rubber interier	gray (interier)	A19/5042-G-16-2500	16,0-17,5	21,5	4,2	2500
		A19/5042-G-16-5000				5000

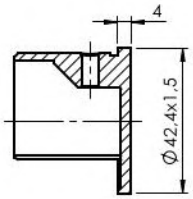

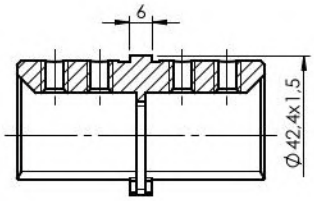

Quality	Finish	art.
AISI304	satin	A/6732-042
AISI316		A14/6732-042

top

Quality	Finish	art.
AISI304	satin	A/6790-042
AISI316		A14/6790-042

top

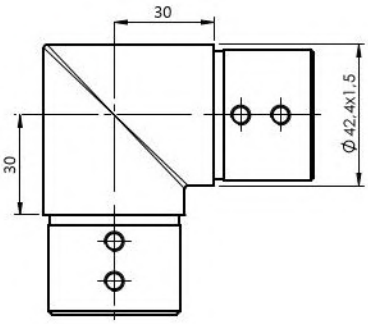

Quality	Finish	art.
AISI304	satin	A/6313-042
AISI316		A14/6313-042

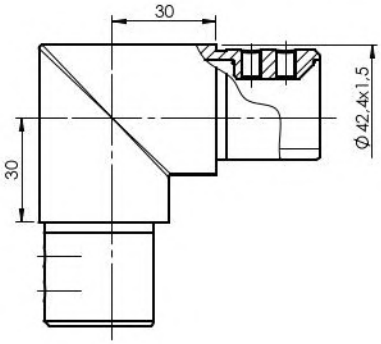

Quality	Finish	art.
AISI316	satin	A14/6303-042

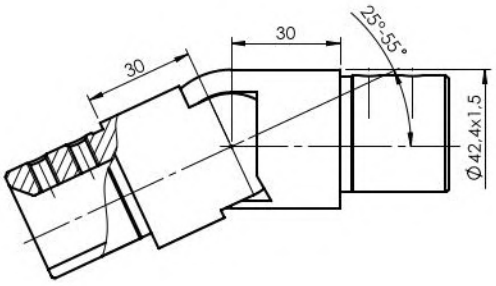

Quality	Finish	art.
AISI304	satin	A/6302-042
AISI316		A14/6302-042

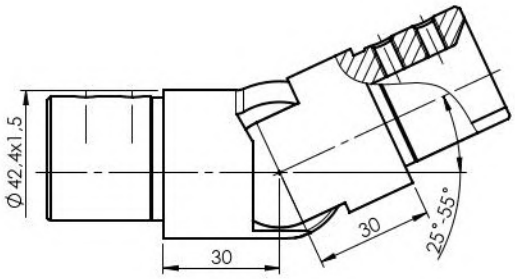

Quality	Finish	art.
AISI304	satin	A/6312-042
AISI316		A14/6312-042

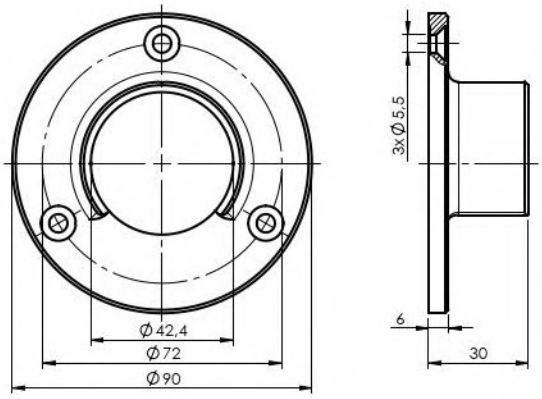

Quality	Finish	art.
AISI316	satin	A14/6505-042

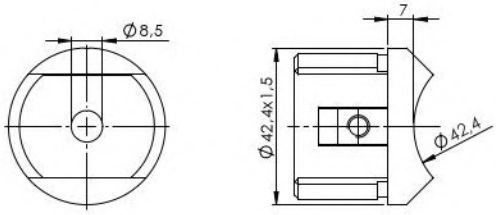

Quality	Finish	art.
AISI316	satin	A14/6727-042

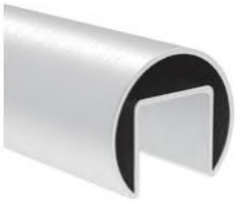

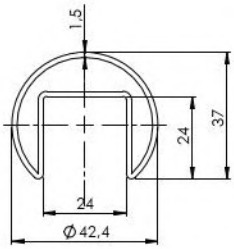

Quality	Finish	Effect	art.	L
ALUMINIUM	satin	silver	AL/6925-042-S-E	3000
		black	AL/6925-042-S-EB	
		silver	AL/6920-042-S-E	6000
		black	AL/6920-042-S-EB	

EPDM - exterier

PVC-P - interier

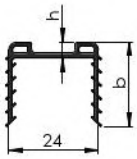

Quality	Finish	art.	Glass t	b	h	L
Rubber	black (exterier)	A19/5042-08-2500	8,0-11,0	22	5	2500
		A19/5042-08-5000				5000
		A19/5042-08-6000				6000
		A19/5042-11-2500	11,5-13,5	25	4,5	2500
		A19/5042-11-5000				5000
		A19/5042-11-6000				6000
		A19/5042-16-2500	16,0-17,5	21,5	4,2	2500
		A19/5042-16-5000				5000
		A19/5042-16-6000				6000
		A19/5042-16-30000				30000
		A19/5042-21-2500	20,76-21,52	24	3,5	2500
		A19/5042-21-5000				5000
		A19/5042-21-6000				6000
Rubber interier	gray (interier)	A19/5042-G-16-2500	16,0-17,5	21,5	4,2	2500
		A19/5042-G-16-5000				5000

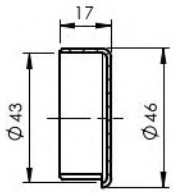

Quality	Finish	art.
ALUMINIUM	satin	AL/6732-042

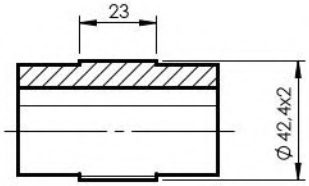

Quality	Finish	art.
ALUMINIUM	satin	AL/6790-042

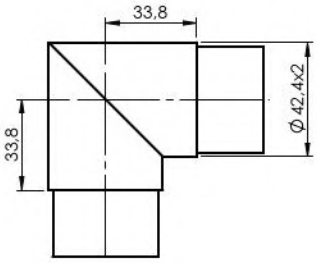

Quality	Finish	art.
ALUMINIUM	satin	AL/6313-042

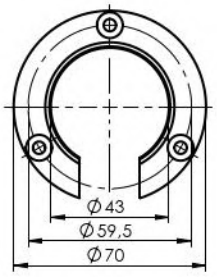

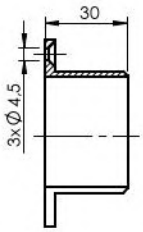

Quality	Finish	art.
ALUMINIUM	satin	AL/6505-042

KNIŽNICA

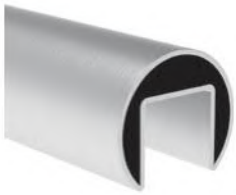

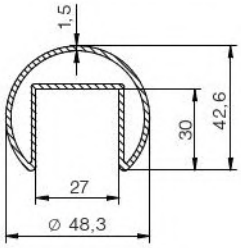

EPDM - exterior

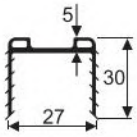

Quality	Finish	art.	L
AISI304	satin	A/6920-048	5000
		A/6925-048	2500
AISI316		A14/6920-048	5000
		A14/6925-048	2500

Quality	Finish	art.	Glass t	L
Rubber	black (exterior)	A19/5048-15-5000	15,0-17,5	5000
		A19/5048-22-2500	20,0-20,5	2500
		A19/5048-26-5000	24,76-25,52	5000

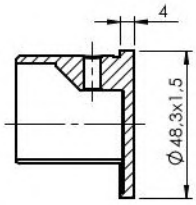

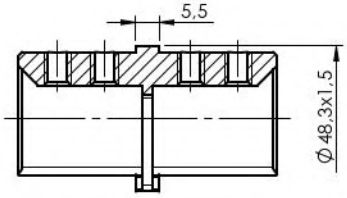

Quality	Finish	art.
AISI304	satin	A/6732-048

Quality	Finish	art.
AISI304	satin	A/6790-048

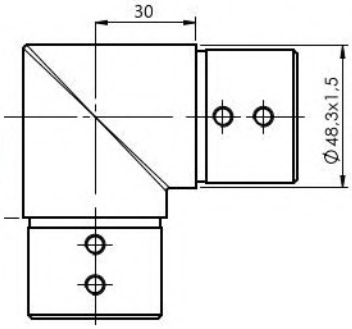

Quality	Finish	art.
AISI304	satin	A/6313-048

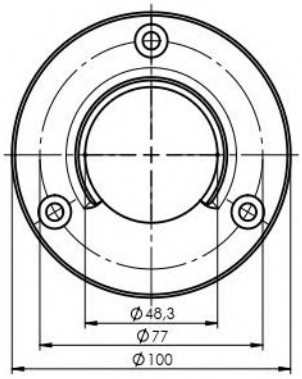

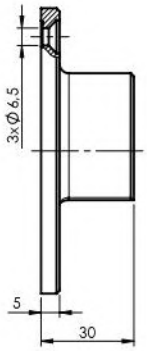

Quality	Finish	art.
AISI304	satin	A/6505-048

MODEL 80x40x1,5

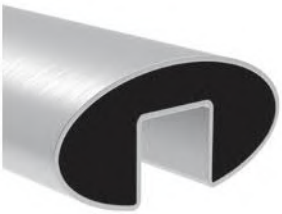

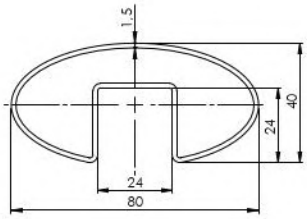

EPDM - exterior

PVC-P - interior

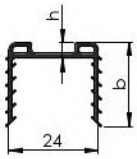

Quality	Finish	art.	L
AISI304	satin	A/6920-080	5000

Quality	Finish	art.	Glass t	b	h	L
Rubber	black (exterior)	A19/5042-08-2500	8,0-11,0	22	5	2500
		A19/5042-08-5000				5000
		A19/5042-08-6000				6000
		A19/5042-11-2500	11,5-13,5	25	4,5	2500
		A19/5042-11-5000				5000
		A19/5042-11-6000				6000
		A19/5042-16-2500	16,0-17,5	21,5	4,2	2500
		A19/5042-16-5000				5000
		A19/5042-16-6000				6000
		A19/5042-16-30000				30000
		A19/5042-21-2500	20,76-21,52	24	3,5	2500
		A19/5042-21-5000				5000
		A19/5042-21-6000				6000
Rubber interier	gray (interier)	A19/5042-G-16-2500	16,0-17,5	21,5	4,2	2500
		A19/5042-G-16-5000				5000

MODEL 42,4

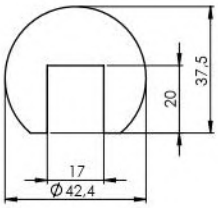

Quality	Finish	art.	L
Beech	natural	WB/6925-042-17	2500
		WB/6925-042-17-CINK	
Oak		WD/6925-042-17	
		WD/6925-042-17-CINK	

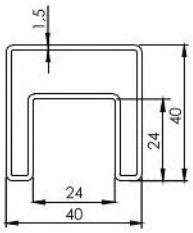

Quality	Finish	art.	L
AISI304	satin	A/6925-040	2500
		A/6920-040	5000
		A/6921-040	6000
AISI316		A14/6920-040	5000

EPDM - exterier

PVC-P - interier

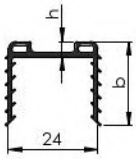

Quality	Finish	art.	Glass t	b	h	L
Rubber	black (exterier)	A19/5042-08-2500	8,0-11,0	22	5	2500
		A19/5042-08-5000				5000
		A19/5042-08-6000				6000
		A19/5042-11-2500	11,5-13,5	25	4,5	2500
		A19/5042-11-5000				5000
		A19/5042-11-6000				6000
		A19/5042-16-2500	16,0-17,5	21,5	4,2	2500
		A19/5042-16-5000				5000
		A19/5042-16-6000				6000
		A19/5042-16-30000				30000
		A19/5042-21-2500	20,76-21,52	24	3,5	2500
		A19/5042-21-5000				5000
		A19/5042-21-6000				6000
Rubber interier	gray (interier)	A19/5042-G-16-2500	16,0-17,5	21,5	4,2	2500
		A19/5042-G-16-5000				5000

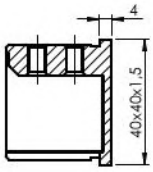

Quality	Finish	art.
AISI304	satin	A/6732-040
AISI316		A14/6732-040

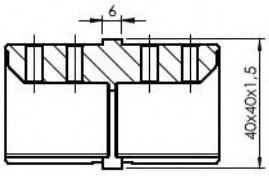

Quality	Finish	art.
AISI304	satin	A/6790-040
AISI316		A14/6790-040

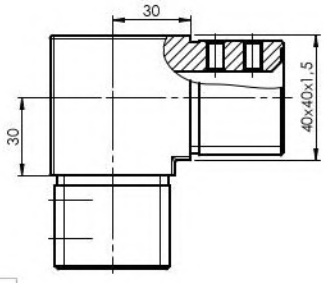

Material	Finish	art.
AISI316	satin	A14/6303-040

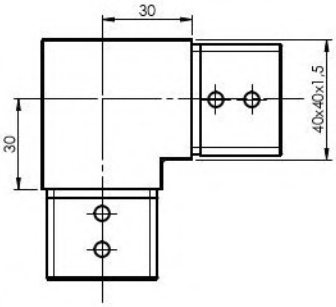

Quality	Finish	art.
AISI304	satin	A/6313-040
AISI316		A14/6313-040

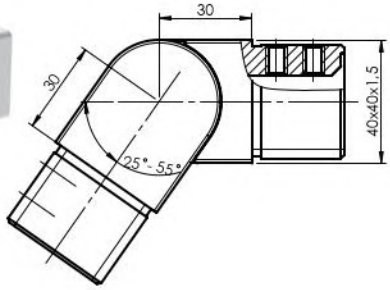

Material	Finish	art.
AISI316	satin	A14/6302-040

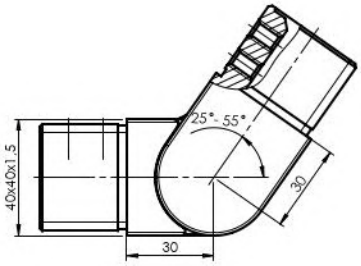

Material	Finish	art.
AISI316	satin	A14/6312-040

MODEL 50x40x2/AL

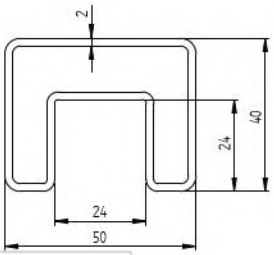

EPDM - exterier

PVC-P - interier

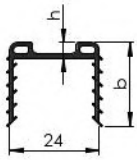

Quality	Finish	Effect	art.	L
ALUMINIUM	satin	silver	AL/6925-540-S-E	3000
			AL/6920-540-S-E	6000
		black	AL/6925-540-S-EB	3000
			AL/6920-540-S-EB	6000

Quality	Finish	art.	Glass t	b	h	L
Rubber	black (exterier)	A19/5042-08-2500	8,0-11,0	22	5	2500
		A19/5042-08-5000				5000
		A19/5042-08-6000				6000
		A19/5042-11-2500	11,5-13,5	25	4,5	2500
		A19/5042-11-5000				5000
		A19/5042-11-6000				6000
		A19/5042-16-2500	16,0-17,5	21,5	4,2	2500
		A19/5042-16-5000				5000
		A19/5042-16-6000				6000
		A19/5042-16-30000				30000
		A19/5042-21-2500	20,76-21,52	24	3,5	2500
		A19/5042-21-5000				5000
		A19/5042-21-6000				6000
Rubber interier	gray (interier)	A19/5042-G-16-2500	16,0-17,5	21,5	4,2	2500
		A19/5042-G-16-5000				5000

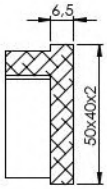

Quality	Finish	art.	⊡
ALUMINIUM	satin	AL/6732-540	50x40x2

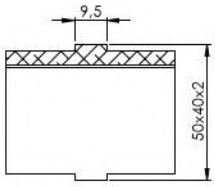

Quality	Finish	art.	⊡
ALUMINIUM	satin	AL/6790-540	50x40x2

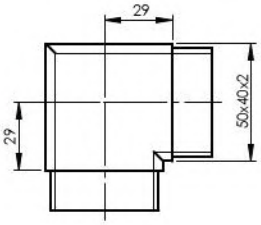

Quality	Finish	art.	⊡
ALUMINIUM	satin	AL/6313-540	50x40x2

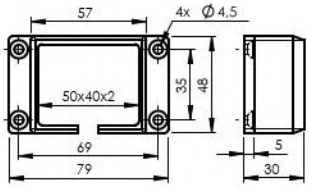

Quality	Finish	art.	⊡
ALUMINIUM	satin	AL/6505-540	50x40x2

MODEL 60x40x1,5

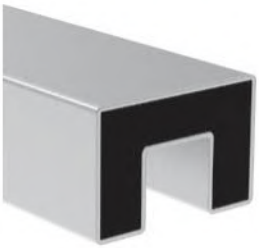

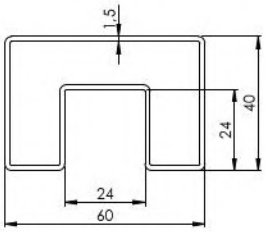

EPDM - exterier

PVC-P - interier

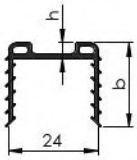

Quality	Finish	art.	L
AISI304	satin	A/6920-640	5000
		A/6925-640	2500
AISI316		A14/6920-640	5000
		A14/6925-640	2500

Quality	Finish	art.	Glass t	b	h	L
Rubber	black (exterier)	A19/5042-08-2500	8,0-11,0	22	5	2500
		A19/5042-08-5000				5000
		A19/5042-08-6000				6000
		A19/5042-11-2500	11,5-13,5	25	4,5	2500
		A19/5042-11-5000				5000
		A19/5042-11-6000				6000
		A19/5042-16-2500	16,0-17,5	21,5	4,2	2500
		A19/5042-16-5000				5000
		A19/5042-16-6000				6000
		A19/5042-16-30000				30000
		A19/5042-21-2500	20,76-21,52	24	3,5	2500
		A19/5042-21-5000				5000
		A19/5042-21-6000				6000
Rubber interier	gray (interier)	A19/5042-G-16-2500	16,0-17,5	21,5	4,2	2500
		A19/5042-G-16-5000				5000

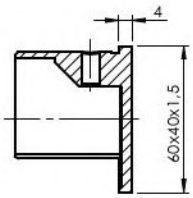

Quality	Finish	art.
AISI316	satin	A14/6732-640

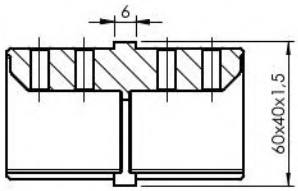

Quality	Finish	art.
AISI316	satin	A14/6790-640

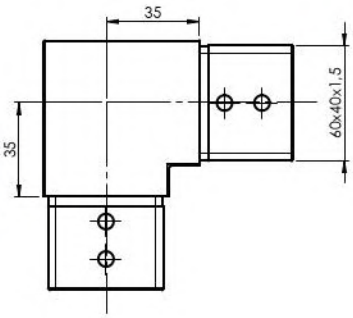

Quality	Finish	art.
AISI316	satin	A14/6313-640

MODEL 40x40/WOOD

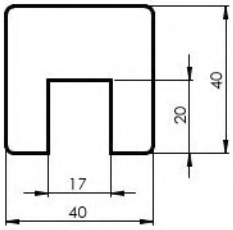

Quality	Finish	art.	L
Beech	natural	WB/6925-040-17	2500
		WB/6925-040-17-CINK	
Oak		WD/6925-040-17	
		WD/6925-040-17-CINK	

MODEL 18x12x2

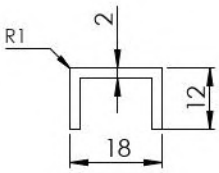

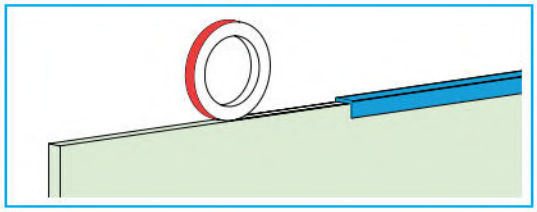

Material	Finish	Effect	art.	L	glass t
ALUMINIUM	satin	ELOX	AL/6901-014-3000-S-E	3000	12-13,52
			AL/6901-014-6000-S-E	6000	
		Black Elox	AL/6901-014-6000-S-EB		

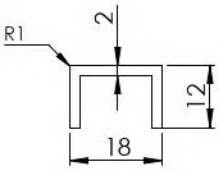

Material	Finish	Effect	art.	L	glass t
ALUMINIUM	satin	ELOX	AL/6901-014-G90-S-E	200	12-13,52
		Black Elox	AL/6901-014-G90-S-EB		

new

MODEL 22x9x2

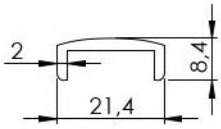

Material	Finish	Effect	art.	L	glass t
ALUMINIUM	satin	ELOX	AL/6901-017-3000-S-E	3000	16,76
			AL/6901-017-6000-S-E	6000	

MODEL 22x16x2

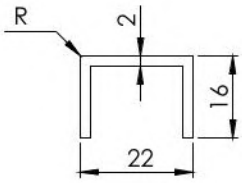

Material	Finish	Effect	art.	L	glass t	R
AISI304	satin	silver	A/6901-018-2500	2500	16-17,52	3
			A/6901-018-5000	5000		
		silver	A/6901-A-018-2500	2500		5
			A/6901-A-018-5000	5000		
ALUMINIUM		ELOX	AL/6901-018-3000-S-E	3000		1
			AL/6901-018-6000-S-E	6000		
		black elox	AL/6901-018-6000-S-EB			

top

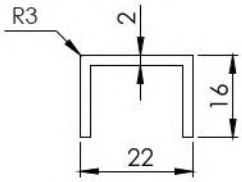

Material	Finish	Effect	art.	L	glass t
AISI304	satin	silver	A/6901-018-G90	200	16-17,52
ALUMINIUM		ELOX	AL/6901-018-G90-S-E		
		Black Elox	AL/6901-018-G90-S-EB		

new

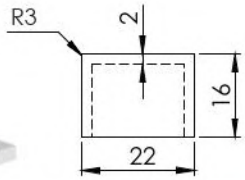

Material	Finish	art.	L	glass t
AISI304	satin	A/6901-018-CAP	200	16-17,52

new

MODEL dx10x1

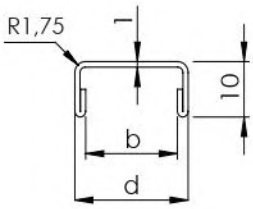

Material	Finish	Effect	art.	L	b	d	glass t
AISI304	satin	silver	A/6902-014-2500	2500	13,5	17,5	13,52
			A/6902-018-2500		17,5	21,5	17,52
			A/6902-022-2500		21,5	25,5	21,52
			A/6902-014-5000	5000	13,5	17,5	13,52
			A/6902-018-5000		17,5	21,5	17,52
			A/6902-022-5000		21,5	25,5	21,52

MODEL 26x20x2

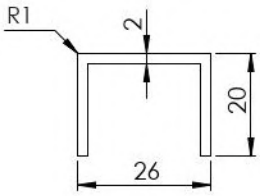

Material	Finish	Effect	art.	L	glass t
ALUMINIUM	satin	ELOX	AL/6901-022-3000-S-E	3000	20-21,52
			AL/6901-022-6000-S-E	6000	
		black elox	AL/6901-022-6000-S-EB		

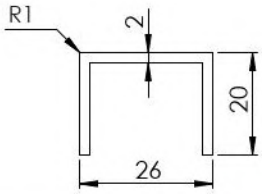

Material	Finish	Effect	art.	L	glass t
ALUMINIUM	satin	ELOX	AL/6901-022-G90-S-E	200	20-21,52
		Black Elox	AL/6901-022-G90-S-EB		

new

5

CAP RAILS

MODEL 28x26x2

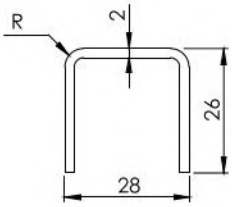

EPDM - exterier

PVC-P - interier

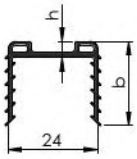

Quality	Finish	art.	L	glass t	R
AISI304	satin	A/6900-024-2500	2500	8-24	3
		A/6900-024-2500-EXCLUSIVE			3,5
		A/6900-A-024-2500			5
		A/6900-024-5000	5000		3
		A/6900-024-5000-EXCLUSIVE			3,5
		A/6900-A-024-5000			5

Quality	Finish	art.	Glass t	b	h	L
Rubber	black (exterier)	A19/5042-08-2500	8,0-11,0	22	5	2500
		A19/5042-08-5000				5000
		A19/5042-08-6000				6000
		A19/5042-11-2500	11,5-13,5	25	4,5	2500
		A19/5042-11-5000				5000
		A19/5042-11-6000				6000
		A19/5042-16-2500	16,0-17,5	21,5	4,2	2500
		A19/5042-16-5000				5000
		A19/5042-16-6000				6000
		A19/5042-16-30000				30000
		A19/5042-21-2500	20,76-21,52	24	3,5	2500
		A19/5042-21-5000				5000
		A19/5042-21-6000				6000
Rubber interier	gray (interier)	A19/5042-G-16-2500	16,0-17,5	21,5	4,2	2500
		A19/5042-G-16-5000				5000

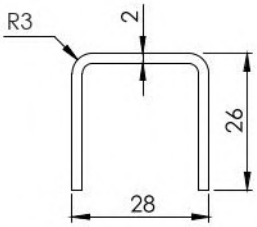

Material	Finish	art.	L	glass t	R
AISI304	satin	A/6900-024-G90	200	8-24	3

new

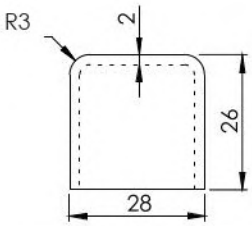

Material	Finish	art.	L	glass t
AISI304	satin	A/6900-024-CAP	200	8-24

MODEL 28x30x2

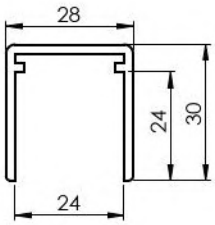

EPDM - exterier

PVC-P - interier

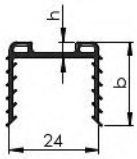

Material	Finish	Effect	art.	L	glass t
ALUMINIUM	satin	ELOX	AL/6902-024-3000-S-E	3000	8-21,52
			AL/6902-024-6000-S-E	6000	

new

Quality	Finish	art.	Glass t	b	h	L
Rubber	black (exterier)	A19/5042-08-2500	8,0-11,0	22	5	2500
		A19/5042-08-5000				5000
		A19/5042-08-6000				6000
		A19/5042-11-2500	11,5-13,5	25	4,5	2500
		A19/5042-11-5000				5000
		A19/5042-11-6000				6000
		A19/5042-16-2500	16,0-17,5	21,5	4,2	2500
		A19/5042-16-5000				5000
		A19/5042-16-6000				6000
		A19/5042-16-30000				30000
		A19/5042-21-2500	20,76-21,52	24	3,5	2500
		A19/5042-21-5000				5000
		A19/5042-21-6000				6000
Rubber interier	gray (interier)	A19/5042-G-16-2500	16,0-17,5	21,5	4,2	2500
		A19/5042-G-16-5000				5000

Material	Finish	art.	compatibility
AISI304	satin	A/6902-024-G90	AL/6902-024...

new

Material	Finish	art.	compatibility
AISI304	satin	A/6902-024-G00	AL/6902-024...

new

MODEL ax6x1

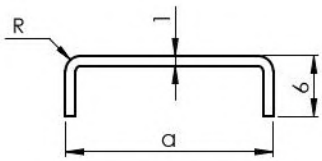

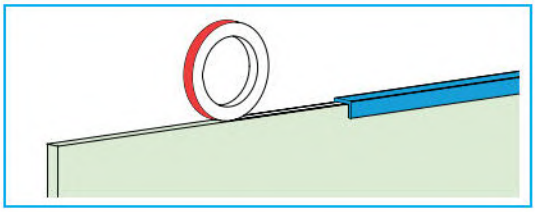

Material	Finish	art.	L	a	glass t	R
AISI304	satin	A/6903-014-6000	6000	16,5	12-13,52	1,75
		A/6903-018-6000		20,5	16-17,52	2
		A/6903-022-6000		24,5	20-21,52	
		A/6903-025-6000		28,5	24,76-25,52	

new

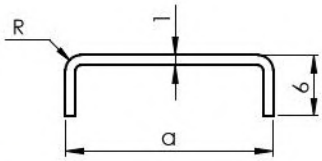

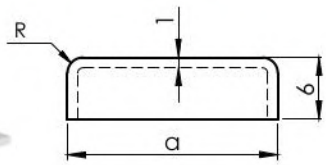

Material	Finish	art.	L	a	glass t	R
AISI304	satin	A/6903-014-G90	200	16,5	12-13,52	1,75
		A/6903-018-G90		20,5	16-17,52	2
		A/6903-022-G90		24,5	20-21,52	
		A/6903-025-G90		28,5	24,76-25,52	

new

Material	Finish	art.	L	a	glass t	R
AISI304	satin	A/6903-014-CAP	200	16,5	12-13,52	1,75
		A/6903-018-CAP		20,5	16-17,52	2
		A/6903-022-CAP		24,5	20-21,52	
		A/6903-025-CAP		28,5	24,76-25,52	

new

6 LED HANDRAILS

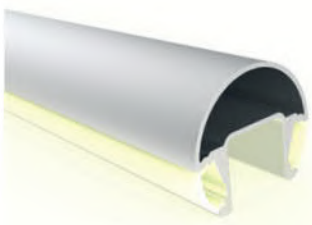

LED HANDRAILS - ROUND

LED HANDRAIL SETS - ROUND

LED HANDRAIL SETS - SQUARE

MODEL 50/AL/LED

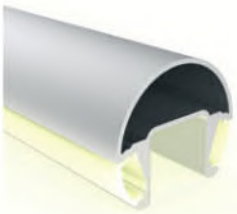

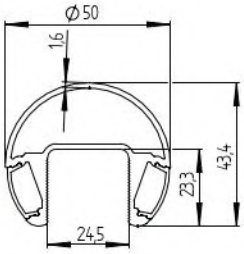

EPDM - exterier

PVC-P - interier

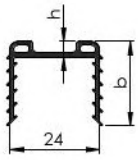

Quality	Finish	Effect	art.	L	LED
ALUMINIUM	satin	silver	AL/6920-050-LED-S-E	6000	✓
		black	AL/6920-050-LED-S-EB		

Quality	Finish	art.	Glass t	b	h	L
Rubber	black (exterier)	A19/5042-08-2500	8,0-11,0	22	5	2500
		A19/5042-08-5000				5000
		A19/5042-08-6000				6000
		A19/5042-11-2500	11,5-13,5	25	4,5	2500
		A19/5042-11-5000				5000
		A19/5042-11-6000				6000
		A19/5042-16-2500	16,0-17,5	21,5	4,2	2500
		A19/5042-16-5000				5000
		A19/5042-16-6000				6000
		A19/5042-16-30000				30000
		A19/5042-21-2500	20,76-21,52	24	3,5	2500
		A19/5042-21-5000				5000
		A19/5042-21-6000				6000
Rubber interier	gray (interier)	A19/5042-G-16-2500	16,0-17,5	21,5	4,2	2500
		A19/5042-G-16-5000				5000

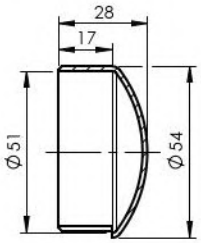

Quality	Finish	art.
ALUMINIUM	satin	AL/6732-050-LED

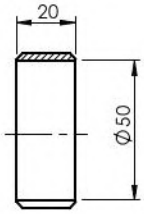

Quality	Finish	art.
ALUMINIUM	satin	AL/6790-050-LED

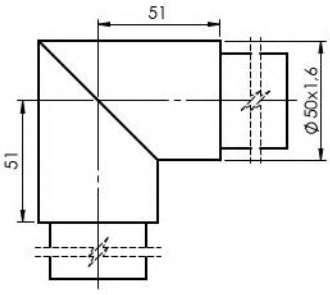

Quality	Finish	art.
ALUMINIUM	satin	AL/6313-050-LED

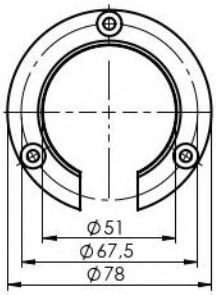

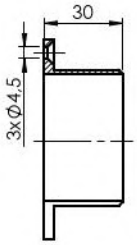

Quality	Finish	art.
ALUMINIUM	satin	AL/6505-050-LED

MODEL **iLED**

Quality	Finish	∅	art.	A/6925-042	LED/24x24-24V (5000K)	YEM/2x0,75-SET	A14/4114-042-LED	A/6732-042
AISI304	satin	42,4x1,5	A/6920-042-iLED-2500	1x (2500mm)	1x (2500mm)	1x	3x	2x

Quality	Finish	Color	art.	L	a x b	IP	Lumen	Power	Voltage	
PVC + SILICONE	white	5000K	LED/24x24-24V	25m	24 x 24	IP40/IP65*	120lm/m	8W/m	24VDC	✓

* IP65 using silicone end

art.	L(m)
YEM/2x0,75-SET	0,75

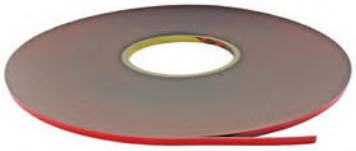

art.	t	b	L
Q9/03-0,2x9	0,2	9	50
Q9/03-0,5x9	0,5	9	33

art.	g
A/GLUE-50g-C	50

top

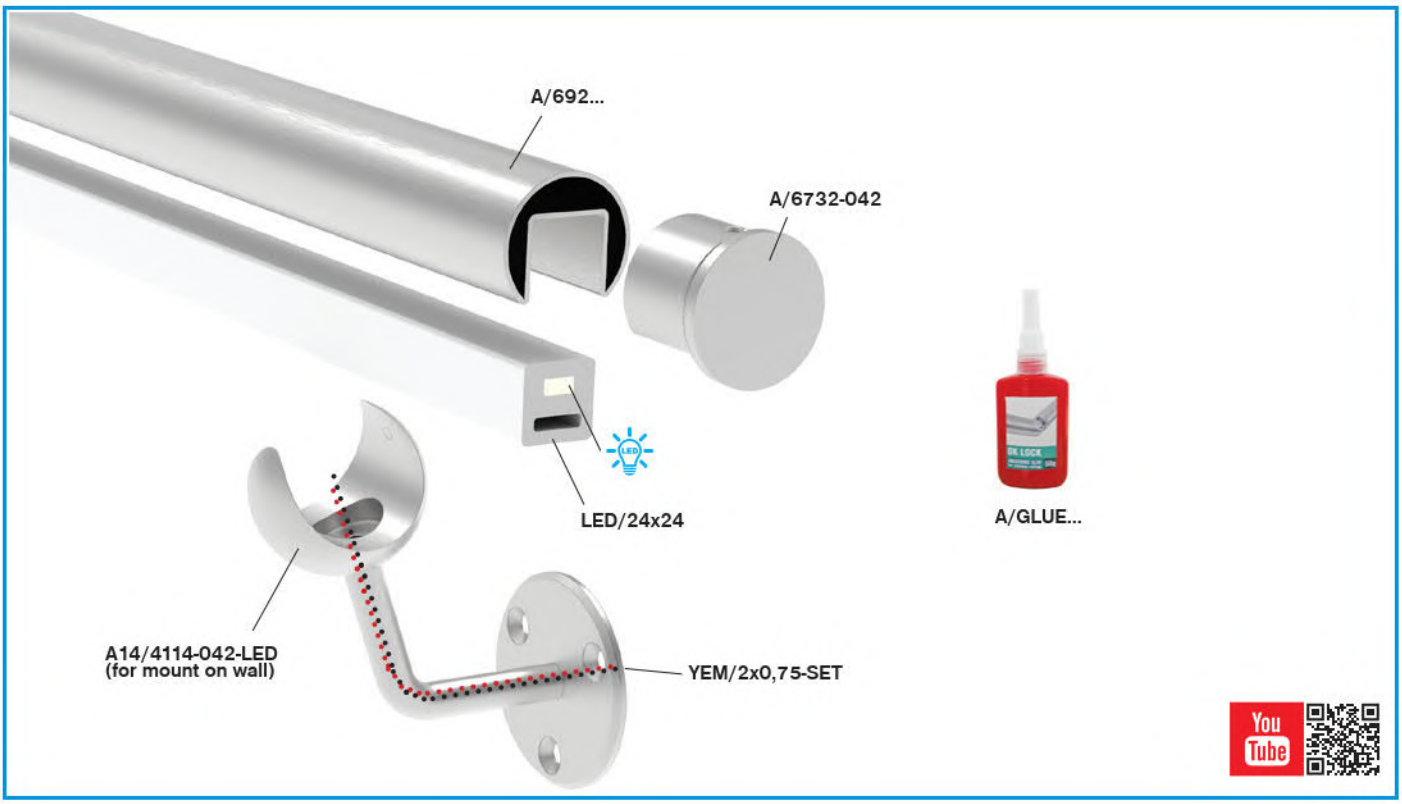

Quality	Finish	∅	art.	A/6920-042	AL/23x24-5000 -LED-SET	A14/PD-LED-23x24	A14/0112-000-LED-B	A/0112-000	A/6732-042
AISI304	satin	42,4x1,5	A/6920-042-LED-5000-S1	1x (5000mm)	1x (5000mm)	5x	1x	4x	2x

+

art.	A-DIN 7380-A2 M5x12	A-DRILL-M5	A/GLUE-20g
Quantity	20x	1x	1x

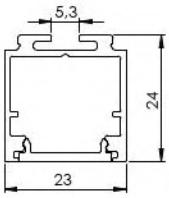

Material	Effect	art.	L
ALUMINIUM	raw	AL/23x24-5000-LED-SET	5000

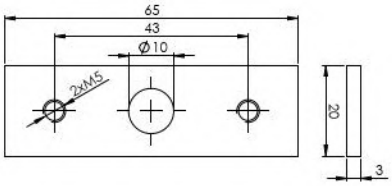

Material	Effect	art.
AISI316	raw	A14/PD-LED-23x24

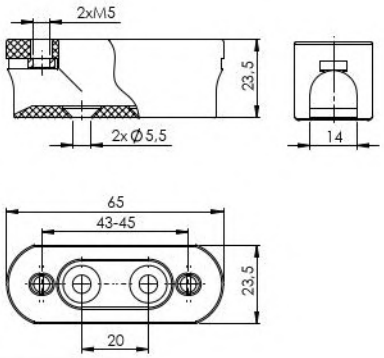

Quality	Finish	art.
PVC	Black	A19/PD-LED

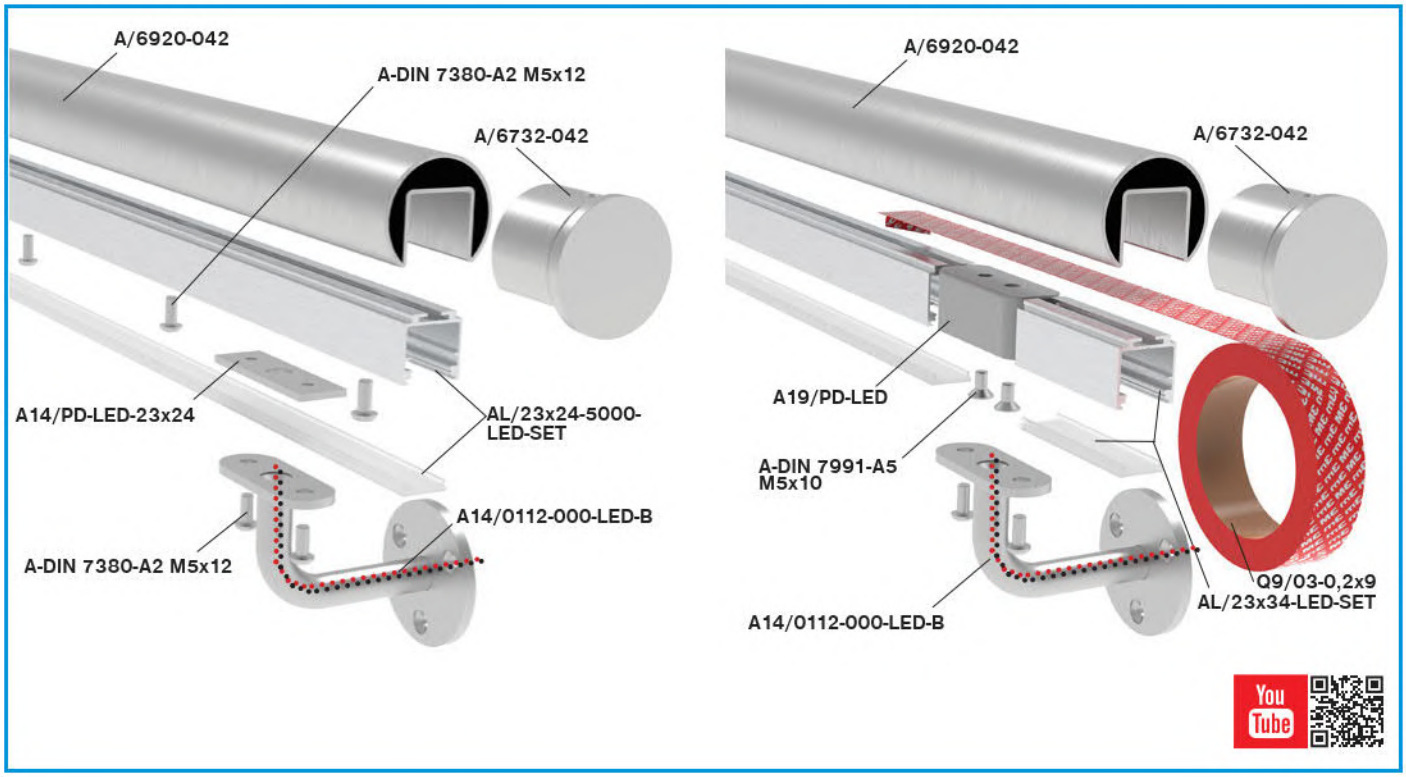

MODEL **SQUARE**

Quality	Finish		art.	A/6920-040	AL/23x24-5000 -LED-SET	A14/PD-LED-23x24	A/4111-000-LED	A/4732-040
AISI304	satin	40x40	A/6920-040-LED-5000-S1	1x (5000mm)	1x (5000mm)	5x	5x	2x

+

art.	A-DIN 7380-A2 M5x12	A-DRILL-M5	A/GLUE-20g
Quantity	20x	1x	1x

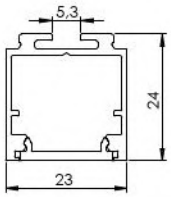

Material	Effect	art.	L
ALUMINIUM	raw	AL/23x24-5000-LED-SET	5000

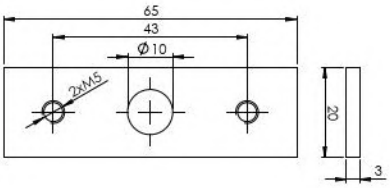

Material	Effect	art.
AISI316	raw	A14/PD-LED-23x24

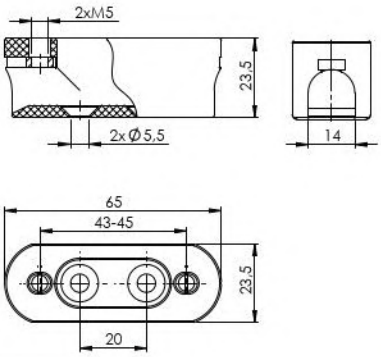

Quality	Finish	art.
PVC	Black	A19/PD-LED

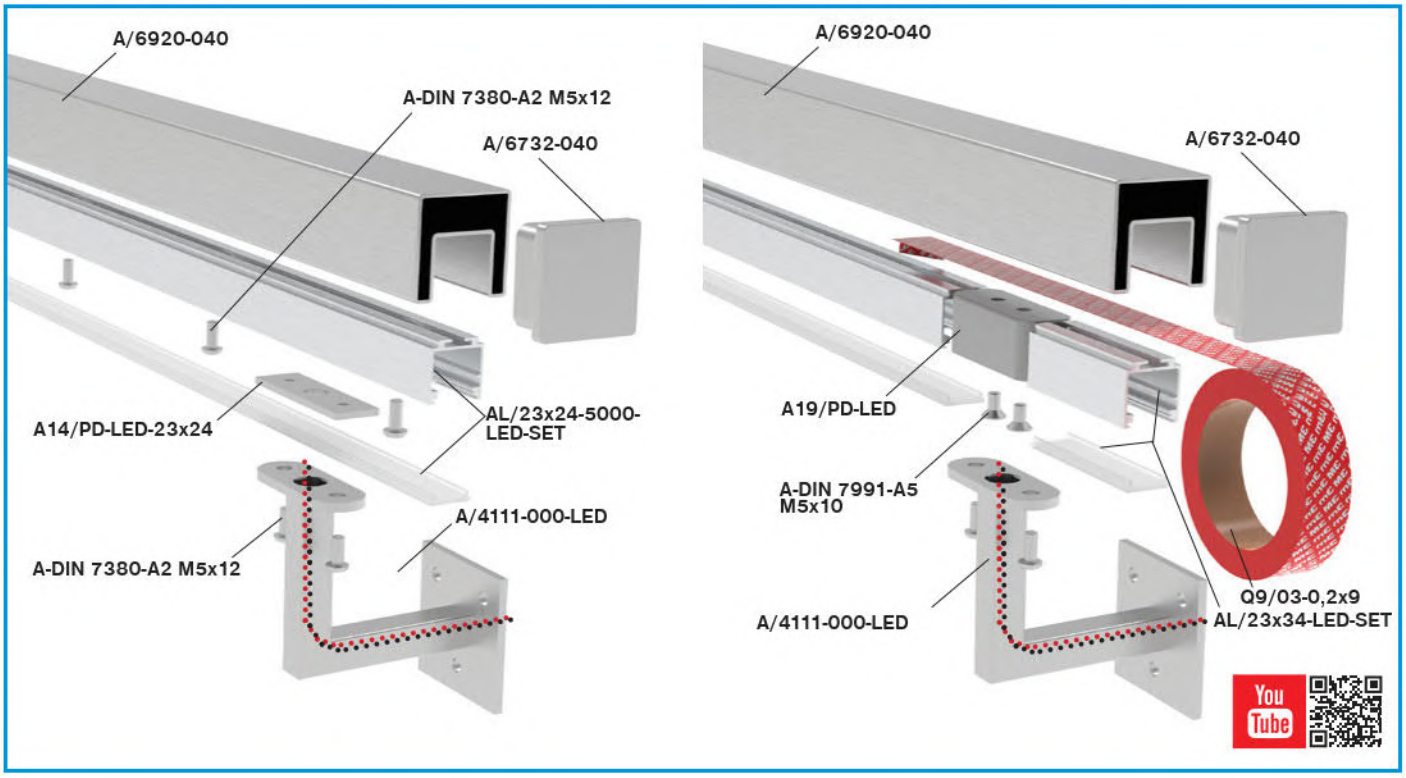

A14/0112-000-LED-B

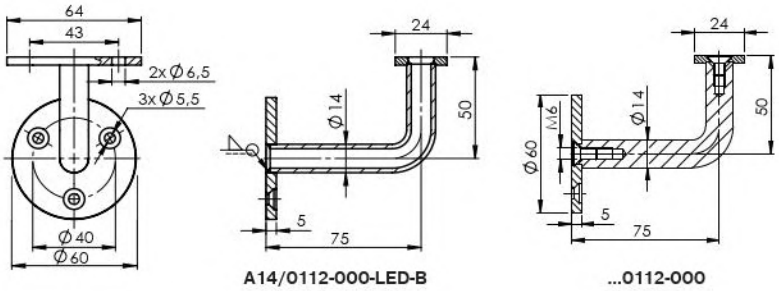

A14/0112-000-LED-B ...0112-000

Quality	Finish	art.
AISI316	satin	A14/0112-000-LED-B
AISI304		A/0112-000
AISI316		A14/0112-000

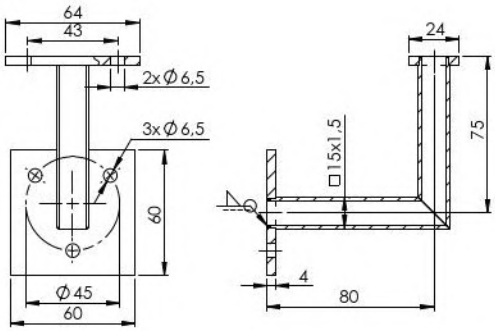

Quality	Finish	art.
AISI304	satin	A/4111-000-LED

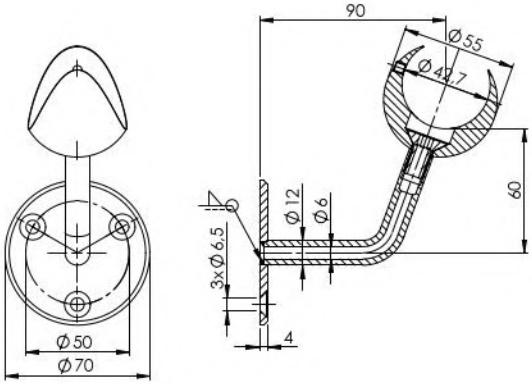

Quality	Finish	art.
AISI316	satin	A14/4114-042-LED

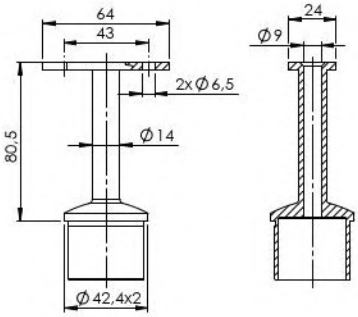

Quality	Finish	art.
AISI304	satin	A/0710-242-LED

7 JULIET BALCONY

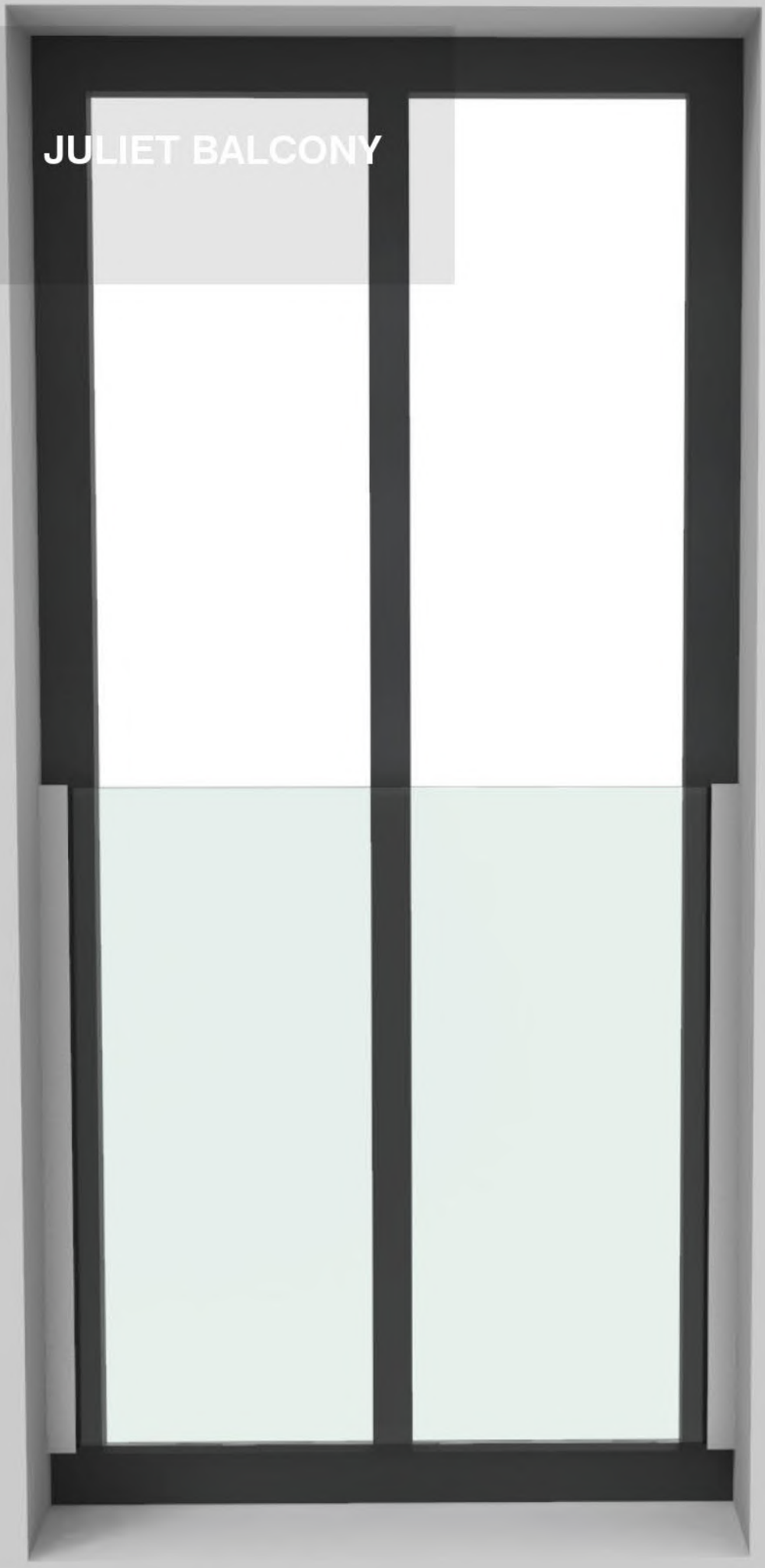

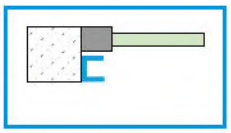

Quality	Finish	Effect	art.	Glass t	L	
ALUMINIUM	natural	silver	GS/FRB10-100-BK-N-E	10,76-21,52	1000	new
			GS/FRB10-110-BK-N-E		1100	new
		RAL 7021	GS/FRB10-110-BK-ANTHRACIT			new
		silver	GS/FRB10-120-BK-N-E		1200	new
		black elox	GS/FRB10-100-BK-N-EB		1000	new
			GS/FRB10-110-BK-N-EB		1100	new
			GS/FRB10-120-BK-N-EB		1200	new

	Accessories			
Quantity	1x pair	1x pair	1x pair	3x pair

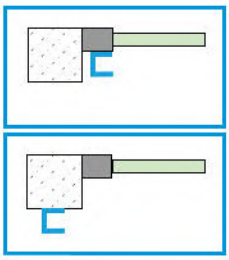

Quality	Finish	Effect	art.	Glass t	L	
ALUMINIUM	natural	silver	GS/FRB10-100-ZK-N-E	10,76-21,52	1000	new
			GS/FRB10-110-ZK-N-E		1100	new
		RAL 7021	GS/FRB10-110-ZK-ANTHRACIT			new
		silver	GS/FRB10-120-ZK-N-E		1200	new
		black elox	GS/FRB10-100-ZK-N-EB		1000	new
			GS/FRB10-110-ZK-N-EB		1100	new
			GS/FRB10-120-ZK-N-EB		1200	new

	Accessories			
Quantity	1x pair	1x pair	1x pair	3x pair

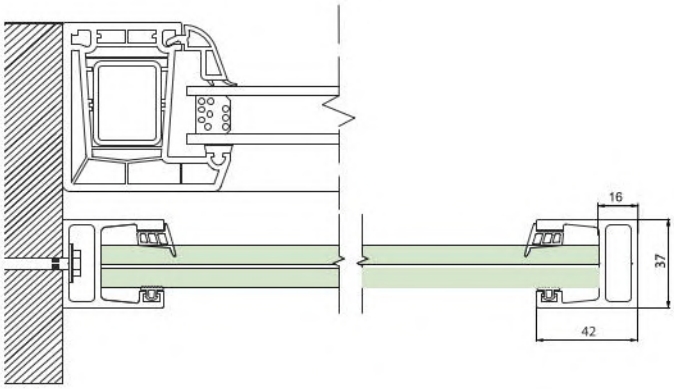

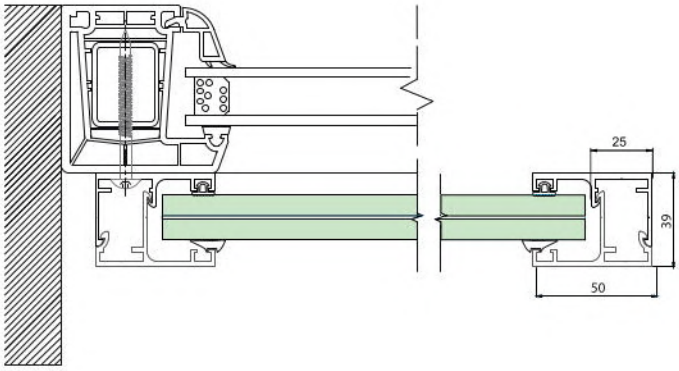

Quality	Finish	art.	Glass t	L		
AISI304	satin	GS-304/FRB2-800x2500-040	8,76	2500	✓	
		GS-304/FRB2-800x2500-042				✓

Quality	Finish	art.	Glass t	Dimensions
AISI304	satin	GS/FRB1-140x100-12,76	12,76	1400x1000

8 ACCESSORIES

Quality	Finish	art.	M	L
AISI304	raw	A-DIN 914-A2 M5x5	5	5
		A-DIN 914-A2 M5x6		6
		A-DIN 914-A2 M5x8		8
		A-DIN 914-A2 M6x6	6	6
AISI316		A4-DIN 914 M5x5	5	5

Quality	Finish	art.
AISI304	raw	A-DIN 916-A2 M10x14
AISI316		A4-DIN 916 M10x14

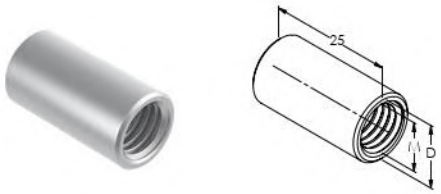

Quality	Finish	art.	M	D
AISI304	raw	A-DIN 6334V M8x25-A2	8	11
		A-DIN 6334V M10x25-A2	10	13

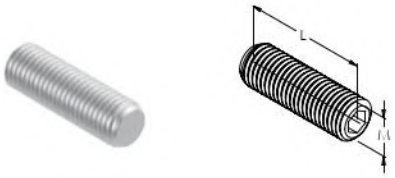

Quality	Finish	art.	M	L
AISI304	raw	A-DIN 913-A2 M5x10	5	10
		A-DIN 913-A2 M6x10	6	
		A-DIN 913-A2 M6x12		12
		A-DIN 913-A2 M8x16	8	16
		A-DIN 913-A2 M8x20		20
		A-DIN 913-A2 M8x25		25
		A-DIN 913-A2 M8x30		30
		A-DIN 913-A2 M8x40		40
		A-DIN 913-A2 M8x80		80
		A-DIN 913-A2 M10x12	10	12
		A-DIN 913-A2 M10x35		35
		A-DIN 913-A2 M10x100		100
AISI316		A4-DIN 913 M5x5	5	5
		A4-DIN 913 M5x10		10
		A4-DIN 913 M6x10	6	
		A4-DIN 913 M6x12		12
		A4-DIN 913 M10x12	10	
		A4-DIN 913 M10x16		16
		A4-DIN 913 M10x55		55

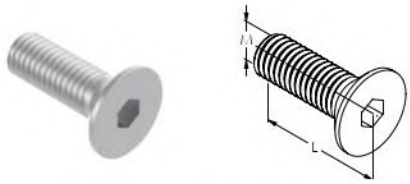

Quality	Finish	art.	M	L
steel 8.8	Zn	DIN 7991 M8x20-Zn	8	20
		DIN 7991 M12x30-Zn	12	30
AISI304	raw	A-DIN 7991-A2 M5x12	5	12
		A-DIN 7991-A2 M5x16		16
		A-DIN 7991-A2 M5x20		20
		A-DIN 7991-A2 M6x8	6	8
		A-DIN 7991-A2 M6x14		14
		A-DIN 7991-A2 M6x16		16
		A-DIN 7991-A2 M6x20		20
		A-DIN 7991-A2 M6x40		40
		A-DIN 7991-A2 M6x60		60
		A-DIN 7991-A2 M8x12	8	12
		A-DIN 7991-A2 M8x16		16
		A-DIN 7991-A2 M8x30		30
		A-DIN 7991-A2 M8x35		35
		A-DIN 7991-A2 M8x70		70
AISI316		A4-DIN 7991 M5x16	5	16
		A4-DIN 7991 M6x14	6	14
		A4-DIN 7991 M6x40		40
		A4-DIN 7991 M8x20	8	20
		A4-DIN 7991 M8x30		30
		A4-DIN 7991 M8x70		70
		A4-DIN 7991 M10x20	10	20
		A4-DIN 7991 M12x30	12	30

Quality	Finish	art.	M	L
steel 8.8	Zn	DIN 7380 M10x20 8.8-Zn	10	20
AISI304	raw	A-DIN 7380-A2 M5x12	5	12
		A-DIN 7380-A2 M6x12	6	
		A-DIN 7380-A2 M8x10	8	10
		A-DIN 7380-A2 M8x12		12
		A-DIN 7380-A2 M8x20		20
		A-DIN 7380-A2 M10x20	10	
		A-DIN 7380-A2 M12x20	12	
AISI316		A4-DIN 7380 M5x12	5	12
		A4-DIN 7380 M5x16		16
		A4-DIN 7380 M6x12	6	12
		A4-DIN 7380 M8x20	8	20
		A4-DIN 7380 M10x20	10	

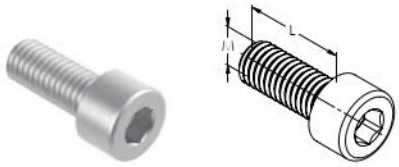

Quality	Finish	art.	M	L
AISI304	raw	A-DIN 912-A2 M5x20	5	20
		A-DIN 912-A2 M8x20	8	
		A-DIN 912-A2 M12x25	12	25
		A-DIN 912-A2 M12x35		35

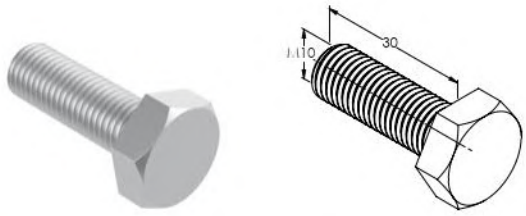

Quality	Finish	art.
steel 8.8	Zn	DIN 933 M10x30 8.8-Zn
AISI316	raw	A4-DIN 933 M10x30

Quality	Finish	art.	M	L
AISI304	raw	A-DIN 917 M8	8	10
		A-DIN 917 M10	10	12

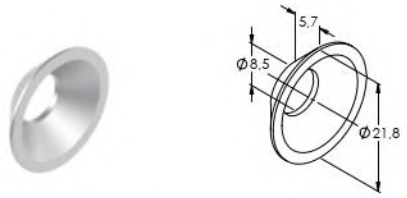

Quality	Finish	art.
AISI316	raw	A14/08-WASHER

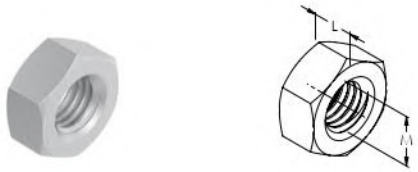

Quality	Finish	art.	M	L
AISI304	raw	A-DIN 439B-A2 M8	8	4
		A-DIN 934 M8		6,5
		A-DIN 934 M10	10	8
		A-DIN 934 M12	12	10
AISI316		A4-DIN 439B M8	8	4
		A4-DIN 934 M10	10	8

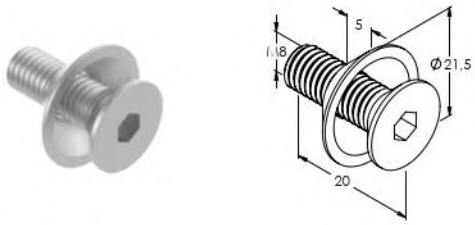

Quality	Finish	art.
steel 8.8	Zn	W-DIN 7991 M8x20-P
AISI316	raw	W-DIN 7991-A4 M8x20-P

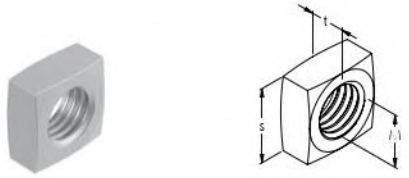

Quality	Finish	art.	M	s	t
AISI304	raw	A-DIN 562 M6	6	10	3,2
		A-DIN 562 M8	8	13	4
		A-DIN 562 M10	10	17	5

Quality	Finish	art.	D	d	t	
steel	Zn	DIN 125 10-Zn	20	10	2	
		DIN 9021 10-Zn	30		2,5	
		WIT-SHB M8-Zn	23	9	5	new
		WIT-SHB M10-Zn	26	12		
		WIT-SHB M12-Zn	28	14		
AISI304	raw	A-DIN 125-A2 M5	10	5	1	
		A-DIN 9021-A2 M8	30	8	2,5	
		A-DIN 125-A2 M8	16		1,6	
		A-DIN 125-A2 M10	20	10	2	
		A-DIN 9021-A2 M10	30		2,5	
		A-DIN 125-A2 M12	24	12	2,5	
		A-DIN 433-A2 M12	20		2	
AISI316		A4-DIN 9021 M8	24	8,4		
		A4-WIT-SHB M8	23	9	5	new
		A4-WIT-SHB M10	26	12		
		A4-WIT-SHB M12	28	14		

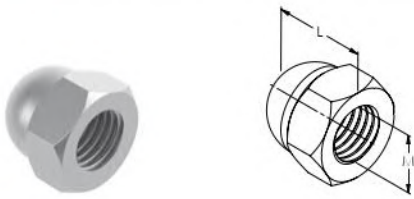

Quality	Finish	art.	M	L
AISI304	raw	A-DIN 1587-A2 M6	6	12
		A-DIN 1587-A2 M8	8	15
		A-DIN 1587-A2 M10	10	18
		A-DIN 1587-A2 M12	12	22
AISI316		A4-DIN 1587 M10	10	18

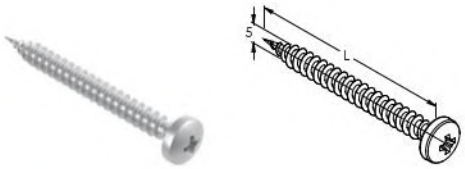

Quality	Finish	art.9	L
AISI304	raw	A-PH 5x20	20
		A-PH 5x35	35

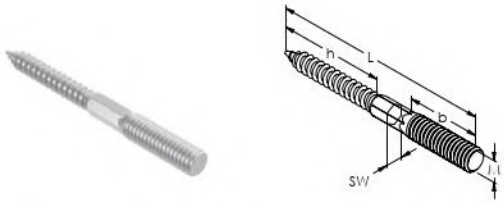

Quality	Finish	art.	M	L	b	h	SW
AISI304	raw	A-DIN 9210 M6x60-A2	6	60	20	37	-
		A-DIN 9210 M8x60-A2	8				
		A-DIN 9210 M8x100-A2		100	42	48	✓
		A-DIN 9210 M10x100-A2	10		30	57	✓
AISI316		A4-DIN 9210 M6x100	6	100			✓
		A4-DIN 9210 M8x60	8	60	20	37	-
		A4-DIN 9210 M8x100		100	42	48	✓

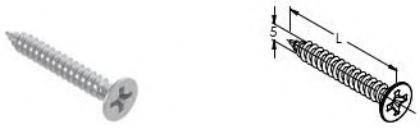

Quality	Finish	art.	L
AISI304	raw	A-DIN 7505A 5x20	20
		A-DIN 7505A 5x35	35

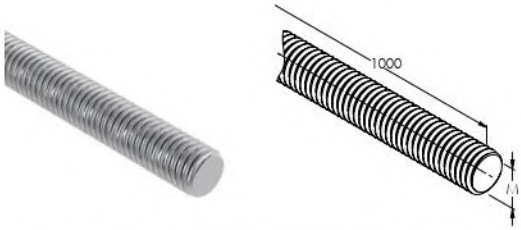

Quality	Finish	art.	M	ETA opt.1
steel 8.8	Zn	Q5/08-VM250-M10-...	10	✓
		Q5/08-VM250-M12-...	12	✓
AISI304	raw	A-DIN 975 M6	6	-
		A-DIN 975 M8	8	-
		A-DIN 975 M10	10	-
		A-DIN 975 M12	12	-
AISI316		A4-DIN 975 M10	10	-
		A5/08-VM250-M10-...-A4	10	✓
		A5/08-VM250-M12-...-A4	12	✓

new

new

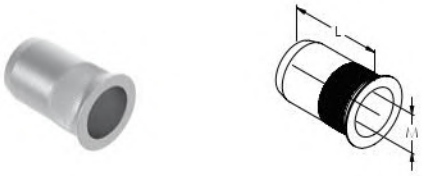

Quality	Finish	art.	M	L
AISI304	raw	A-FTT-M5	5	12
		A-FTT-M6	6	14
		A-FTT-M8	8	16,5
		A-FTT-M10	10	19

Quality	Finish	art.
AISI304	raw	A-DIN 7337-A2 4,8x20

Quality	Finish	art.	M
steel	Zn	WOOD/M8-D	8
		WOOD/M10-D	10

A19/04-PVC... A12/12-PVC A12/12-35-PVC

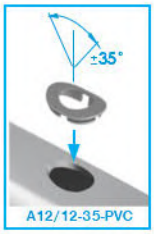

Quality	Finish	art.
PVC	satin	A19/04-PVC
	polish	A19/04-PVC-L
	raw	A12/12-PVC
		A12/12-35-PVC

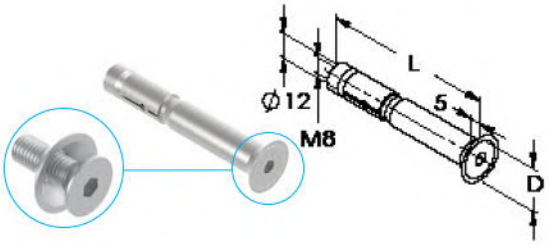

Quality	Finish	art.	L	D/v
steel	Zn	Q5/08-HAZ-M8-80SK/S	80	20,5/5
		Q5/08-FH12-50	125	22/5,8
AISI316	raw	A5/08-HAZ-M8-80SK/A4	80	20,5/5

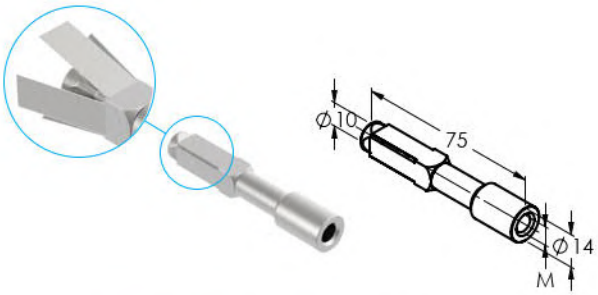

Quality	Finish	art.	M
steel	raw	Q11/FPX-M8	8
		Q11/FPX-M10	10

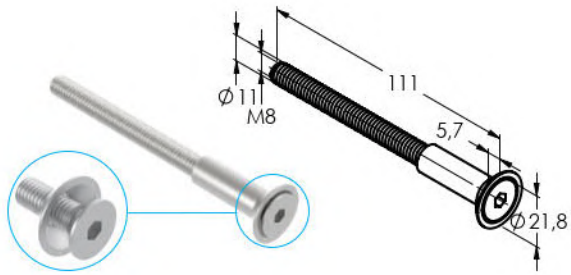

Quality	Finish	art.
AISI304	raw	A5/08-105x11xM8
AISI316		A14/08-105x11xM8

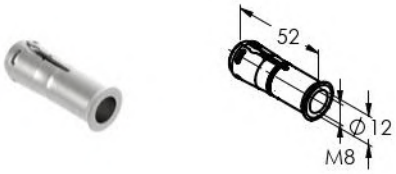

Quality	Finish	art.
steel	Zn	Q5/08-TNTR08-8x52

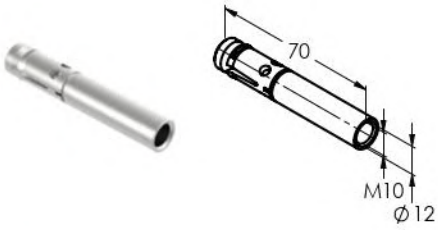

Quality	Finish	art.
steel	Zn	Q5/08-FAZ-IG-M10-70/S
AISI316	raw	A5/08-FAZ-IG-M10-70/A4

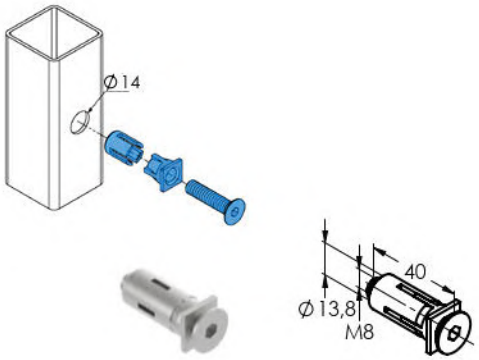

Quality	Finish	art.
steel	Zn	Q5/09-Quick-Fix QF5

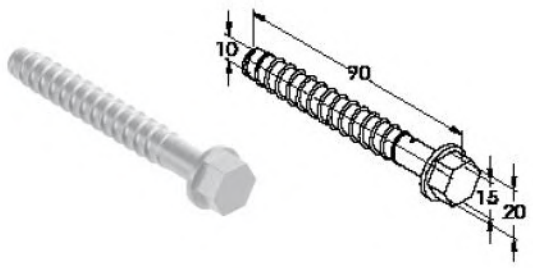

Quality	Finish	art.
steel 5.8	Zn	Q5/08-BS-S-10-90/S
AISI316	raw	A5/08-BS-S-10-90/A4

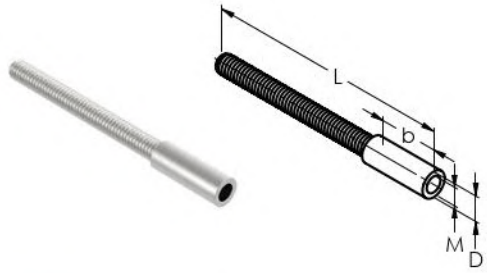

Quality	Finish	art.	M	L	D	b
AISI304	raw	A19/27-M8	8	140	11	15
		A19/27-M10	10		13	
		A19/27-M12	12	130	15	25

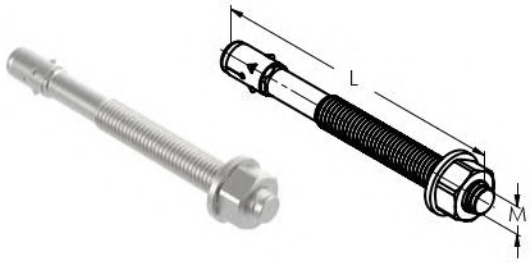

Quality	Finish	art.	M	L
steel	Zn	Q5/06-8x100CE	8	92
		Q5/06-10x120CE	10	120
	raw	Q5/08-FBN12-30	12	126
	Zn	Q5/06-16x123CE	16	123
		Q5/06-16x138CE	16	138
AISI304	raw	A-Q5/06-10x120CE	10	120

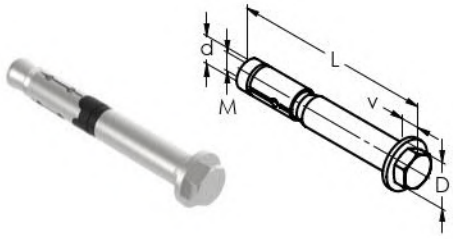

Quality	Finish	art.	M	L	d	D/v
steel	Zn	Q5/08-HAZ-M8-85S/S	8	85	12	20/7,5
	raw	Q5/08-FH15/25 S	10	89	15	25/9,5
	Zn	Q5/08-HAZ-M10-106S/S		106		
AISI316	raw	A5/08-HAZ-M8-85S/A4	8	85	12	20/7,5
		A5/08-HAZ-M10-106S/A4	10	106	15	25/9,5

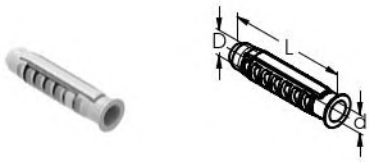

Quality	Finish	art.	D	d	L
NYLON	gray	Q5/07-8 NYLON	8	2,5-4	40
		Q5/07-10 NYLON	10	3-6	50
		Q5/07-12 NYLON	12	4-8	60

Quality	Finish	art.	M	L	D
steel 5.8	Zn	Q5/08-VI-IG-M8-100/S	8	100	12
		Q5/08-VI-IG-M10-80/S	10	80	16
		Q5/08-VI-IG-M12-125/S	12	125	20
AISI316	raw	A5/08-VI-IG-M8-100/A4	8	100	12
		A5/08-VI-IG-M10-80/A4	10	80	16
		A5/08-VI-IG-M12-125/A4	12	125	20

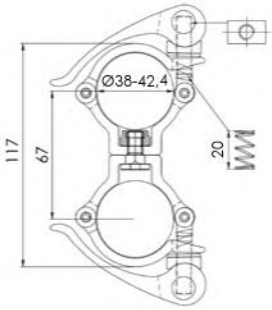

Quality	Finish	art.
ALUMINIUM	satin	AL/0792-3842

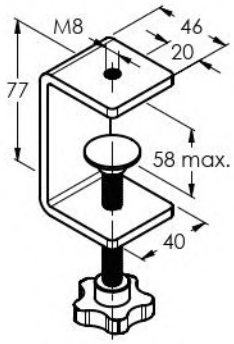

Quality	Finish	art.
AISI304	satin	A6/2xM8-77x40

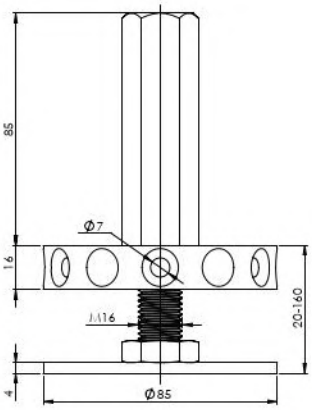

Quality	Finish	art.	description
Fe	Zinc	MP/GLASS-01	glass mount on post railings

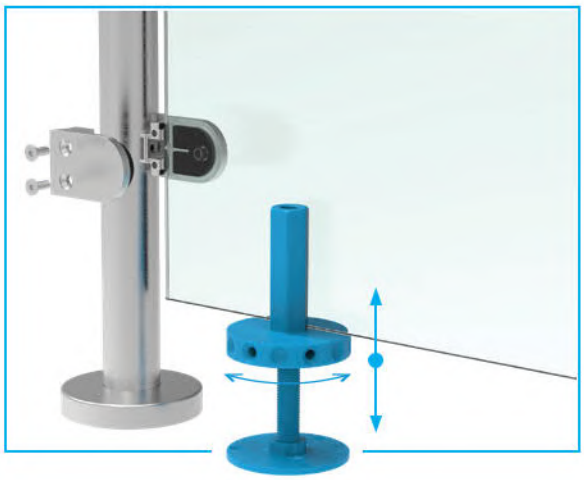

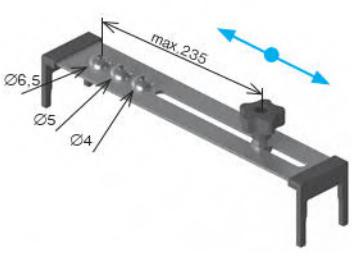

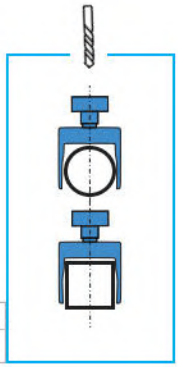

Quality	art.	∅	⊡
AISI304	A/40580-PLASTIC	42,4	40

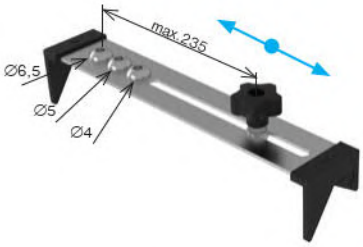

new

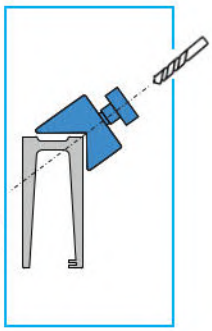

Quality	art.	compatibility
AISI304	A/40580-PLASTIC-V2	AL/0004... AL/0004-eco... AL/0004-PRO...

art.
AL/glass-mont-PRO

new

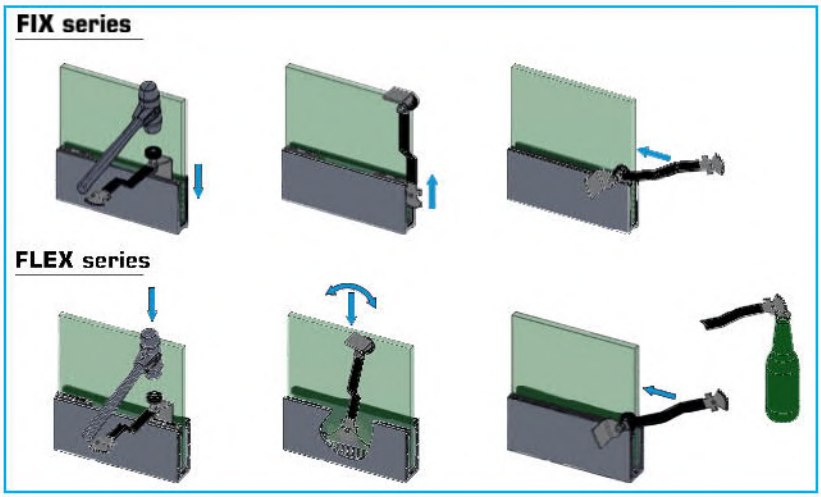

Quality	Finish	art.
PETG	gray	MP/excenter-mount

new

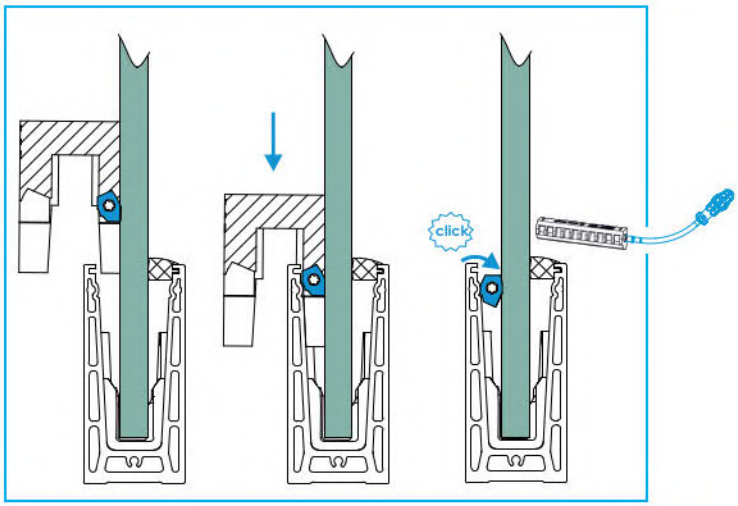

art.	glass t
AL/GLASS-HOLDER	1-70mm

art.	total length	ext. square
Q8/70-275-PRO	275mm	1/4"

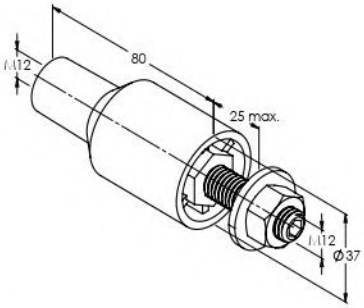

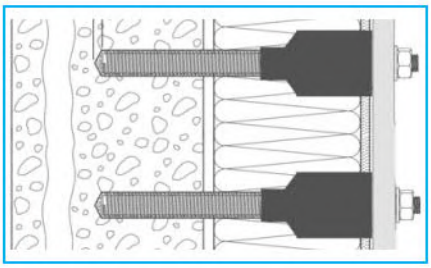

Quality	Finish	art.	M
AISI304	raw	Q10/Therm-M12/M12	12-12
		Q10/Therm-mini-M10/M8	10-8

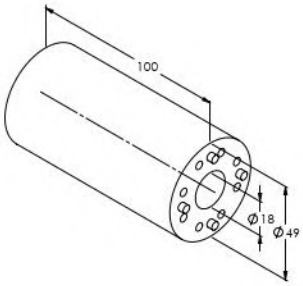

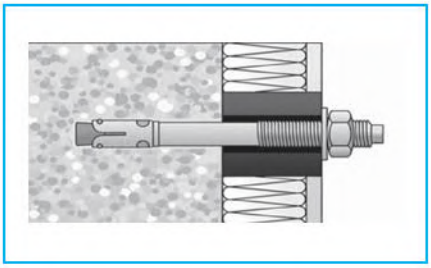

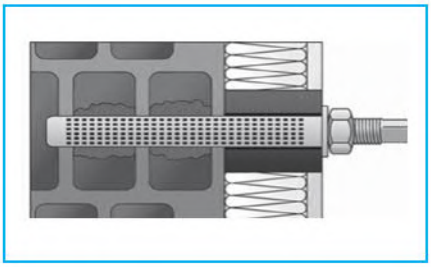

Quality	Finish	art.
PVC	black	A19/05-100

Quality	Finish	art.
PVC	black	MP/water-level

new

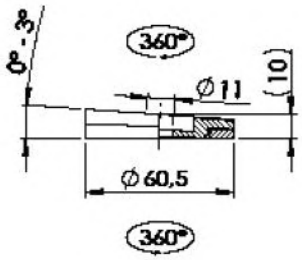

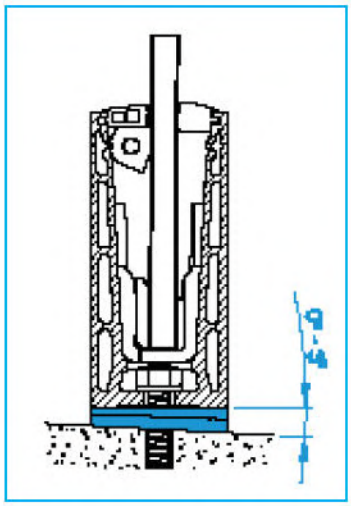

Quality	Finish	art.
AISI304	natural	Q10/ANGLE-0-3-60

new

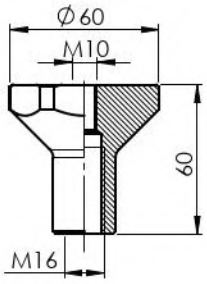

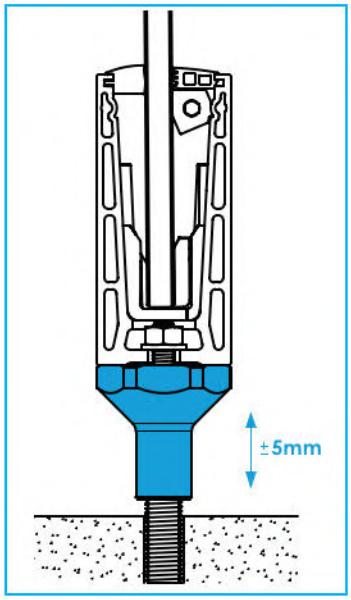

Quality	Finish	art.
AISI304	natural	Q10/60-M16/M10

new

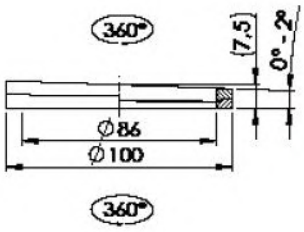

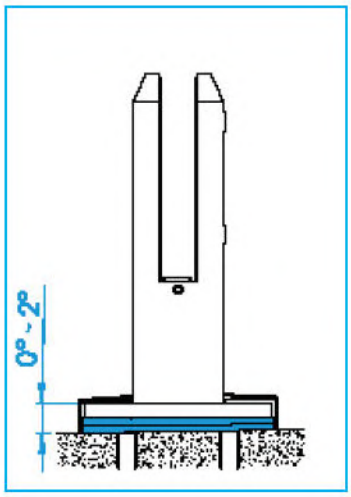

Quality	Finish	art.
AISI304	natural	Q10/ANGLE-0-2-100

new

art.	ml	quality	description
Q5/01GF-300 Nordic		vinylester	-20°C +10°C
Q5/01GF-400 Nordic			
Q5/01GF-300			-10°C +30°C
Q5/01GF-400			

top

art.	ml	quality	description
Q5/01B-300		vinylester	-10°C +40°C
Q5/01B-400			-10°C +40°C
Q5/01B-400 Winter			-20°C +20°C

new

art.	ml	quality	description
Q5/01GFP-300		Polyester	-5°C +30°C
Q5/01GFP-400			

art.	ml	quality	description
Q5/05TR-310		Silicone	-5°C +40°C

art.	ml	quality	description
Q5/01-WIT-UH300...	320	uretan vinylester	-5°C +40°C
Q5/01-WIT-VM250...	300	vinylester	-10°C +40°C

Q5/04-250

art.	M	L
Q5/04	17	215
Q5/04-250	8	250

new

art.	description
Q5/03-300	300ml, hobby

art.	description
Q5/03-400	400ml, profi

art.	description
Q5/01-16x130	mesh

art.	description
Q5/02	blow pump

art.	t	b	L
Q9/03-3x12	3	12	16,5

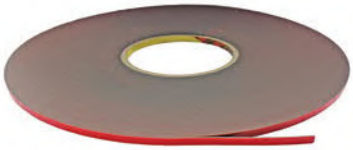

art.	t	b	L
Q9/03-0,2x9	0,2	9	50
Q9/03-0,5x9	0,5	9	33
Q9/03-2x6	2	6	16,5

new

art.	∅	description
Q1/B02-INOX	3-45	Pipe cutting

art.	compatibility
Q1/B02-INOX-RK	**Q1/B02-INOX**

Quality	Finish	art.
AISI304	raw	**A19/model741-8**

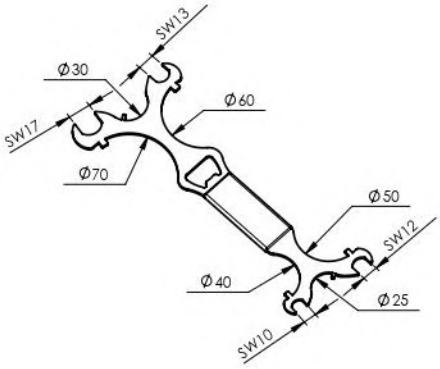

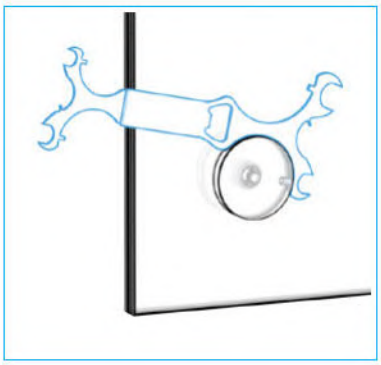

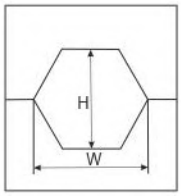

art.	Mould size	W	H
Q8/95	4	4	3
	6	5	3,5
	8	6	4,5
	10	6,5	5,4
	16	7,3	6,4
	25	9	7,4
	35	11	9,2
	50	13	10,8
	70	15	12,6

new

art.	description
Q8/LP-7x4,5	riveting punch

new

art.	description
Q8/LP-7x4,5-B	riveting punch

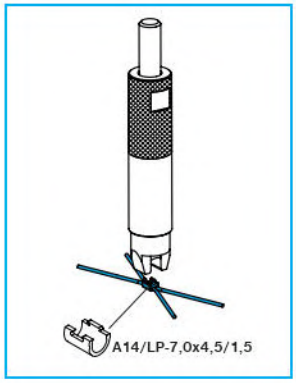

Quality	art.	M	Ø
HSS-CO5	A-DRILL-M5	5	4
	A-DRILL-M6	6	4,8
	A-DRILL-M8	8	6,4

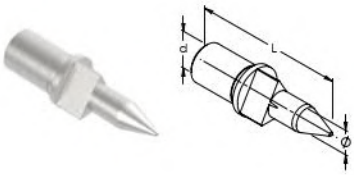

Quality	art.	M
HSSE	A/FDRILL-M5C	5
	A/FDRILL-M6C	6
	A/FDRILL-M8C	8
	A/FDRILL-M10C	10

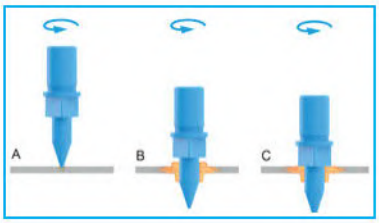

art.	description
Q1/RN01-125x1	cutting disc

top

art.	description
Q1/L01-125-40	flap disc
Q1/L01-125-80	flap disc
Q1/L01-125-120	flap disc

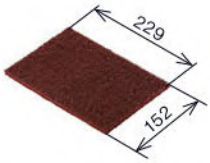

art.	granularity
Q1/G01	360

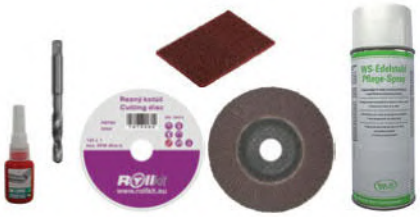

Q/INOX-INSTALL-SET

Q/INOX-INSTALL-SET-B

new

art.								
Q/INOX-INSTALL-SET	1x	-	-	1x	1x	1x	1x	1x
Q/INOX-INSTALL-SET-B	-	1x	1x	2x	2x			2x

art.	g	gap	description
A/Glue-10g-C	10	0,2	INOX

art.	g	gap	description
A/Glue-20g	20	0,2	all purpose superfast

art.	g	gap	description
A/GLUE-50g-C	50	0,2	INOX
A/GLUE-50g-D		0,4	INOX

new

art.	ml	description
Q5/05-MAMUT	290	instant fix

new

art.	ml
GS/Cleaner-Glass	200

new

art.	ml
GS/Cleaner-Metal	200

A/ACTIVATOR

CA/ACTIVATOR

CA/LAK

art.	g	description	
A/ACTIVATOR-50g	50	for A/Glue..	new
CA/ACTIVATOR	1000	corten effect	new
CA/LAK		lacquer for corten	new

art.	ml	description	
A/spray-WS	400	INOX	top

art.	ml	description
A/Cleaner-500ml	500	INOX

Art.
PNL/G04-28x15-BOX *new*

Art.
PNL/G04-28x15 *new*

Art.
PNL/G03-30x42

Art.
REK-CASE-ALU

Art.
REK-CASE-INOX3

Art.
GS/SAMPLE...

Art.
kat-Forged-2023/24

Art.
kat-Gates-2023/24

Art.
kat-Automations-2023/24

Art.
KAT-GLASS RAILINGS-2023/24

Art.
KAT-POST RAILINGS-2022/23

Art.
KAT-GLASS SYSTEMS-2023/24

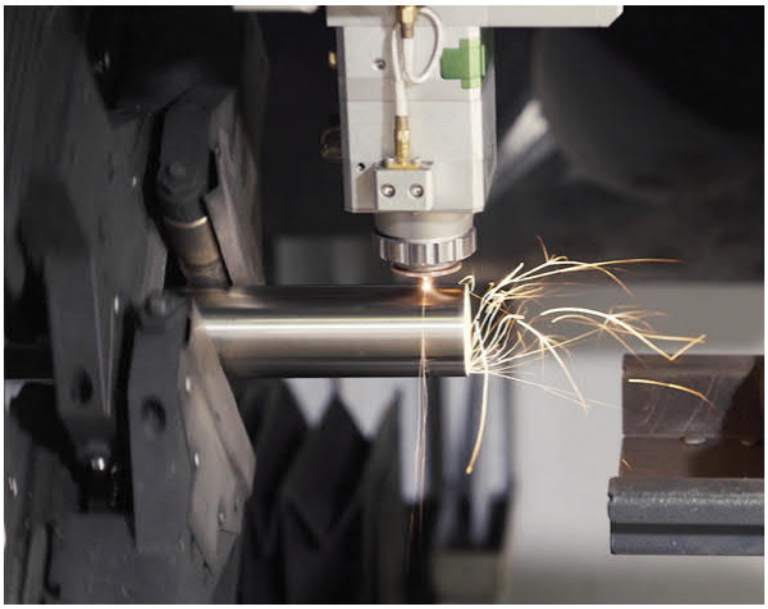

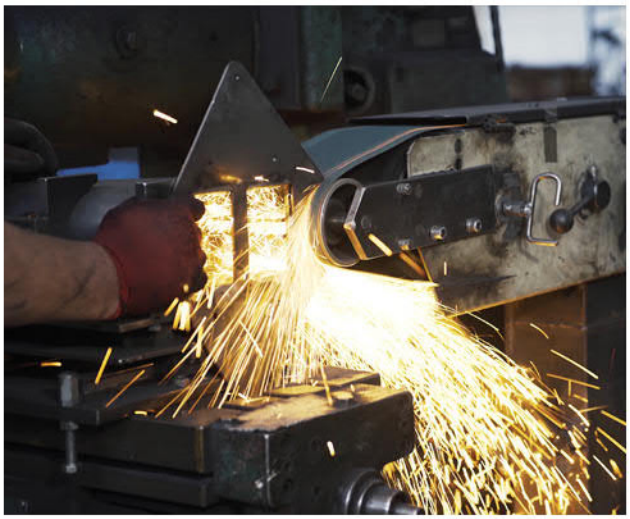

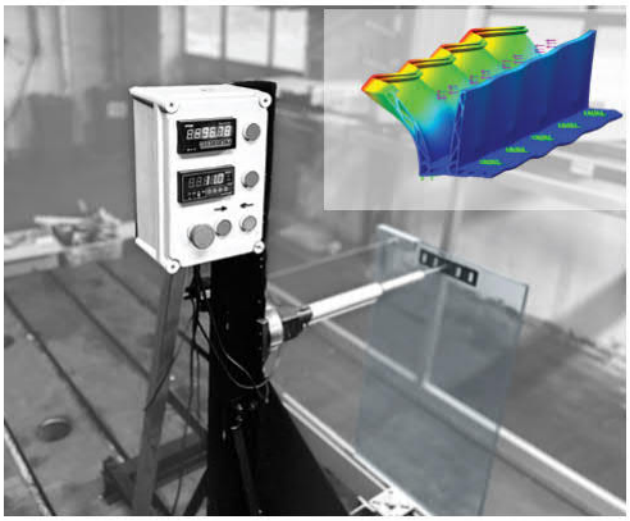

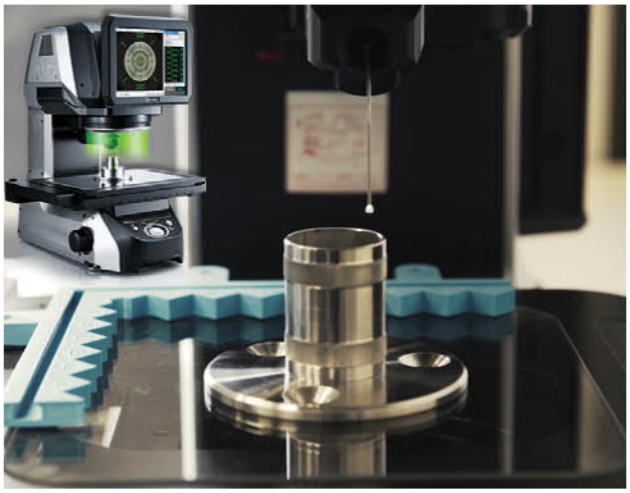

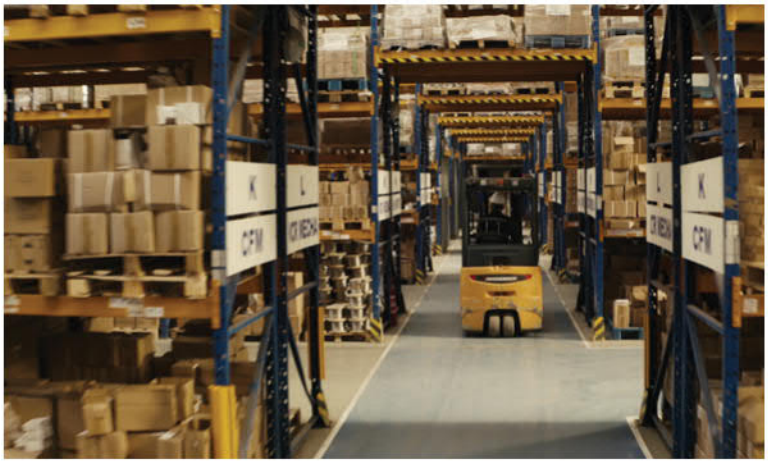

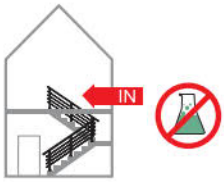

INOX			ALUMINIUM	ZAMAK
AISI304	AISI316	S.S. 2205		
✓	✓	✓	✓	✓

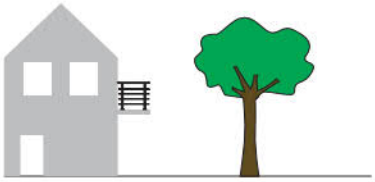

INOX			ALUMINIUM	ZAMAK
AISI304	AISI316	S.S. 2205		
✓	✓	✓	✓	✗

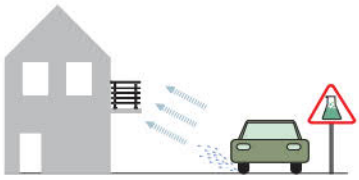

INOX			ALUMINIUM	ZAMAK
AISI304	AISI316	S.S. 2205		
✗	✓	✓	✓	✗

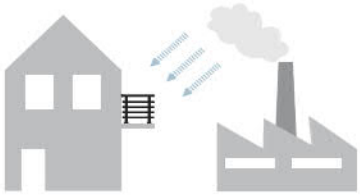

INOX			ALUMINIUM	ZAMAK
AISI304	AISI316	S.S. 2205		
✗	✓	✓	✓	✗

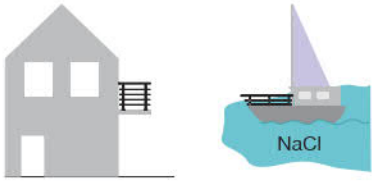

INOX			ALUMINIUM	ZAMAK
AISI304	AISI316*	S.S. 2205		
✗	✓	✓	✓	✗

* *only mirror finish (polished)*

INOX			ALUMINIUM	ZAMAK
AISI304	AISI316	S.S. 2205		
✗	✗	✓	✗	✗

material	AISI304 AISI316 S.S. 2205	nerezová oceľ	stal nierdzewna	rozsdamentes acél	stainless steel	Edelstahl	INOX
	CORTEN	corten oceľ	corten stal	corten acél	corten steel	Cortenstahl	corten
	ALUMINIUM	hliník	aluminium	alumínium	aluminium	Aluminium	aluminium
	ZAMAK	zliatina Zn+Al	stop cynku i aluminium	Zn+Al ötvözet	ZAMAC	Zinkdruckguss	alliage Zn+Al
	Fe	železo	żelazo	vas	iron	Eisen	fer
	Zn	zinok	cynk	cink	zinc	Zink	zinc
	Brass	mosadz	miedź	sárgaréz	brass	Messing	laiton
	PVC	polyvinyl chloride					
	PETG	polyethylene terephthalate glycol					
	Rubber	guma	guma	gumi	rubber	Gummi	gomme
	Beech	buk	buk	bükk	beech	Buche	hêtre
	Oak	dub	dąb	tölgy	oak	Eiche	chêne
	Spruce	smrek	świerk	lucfenyő	spruce	Fichte	épicéa
	VSG/ESG	sklo	szkło	üveg	glass	Glas	verre
finish/effect	satin	brus K320	szlif K320	szálcsiszolt K320	brushed K320	geschliffen K320	brossé K320
	silver	strieborný	srebro	ezüst	silver	Silber	argent
	polish	lesk	polerowany	tükör polírozott	polished	poliert	poli
	raw	surový	surowy	nyers	raw	roh	brossé
	natural	nebrúsený	neszlifovany	natúr	rough	ungeschliffen	non-brossé
	INOX	nerez	nierdzewny	rozsdamentes	inox	Edelstahl	inox
	ELOX	eloxovaný	anodowany	eloxált	elox	Eloxiert	anodisé
		potrebné úpravy	niezbędne przystosowanie	szükséges módosítás	necessary modification	Anpassung ist notwendig	modification nécessaire
	not assembled	nezmontované	niezłożone	nem összeszerelt	not assembled	unmontiert	non assemblé
	≈	približný rozmer	przybliżone wymiary	közelítő méretek	approximate dimension	die Abmessungen sind ungefähr	dimensions approximatives
	Top	bestseller	bestseller	legjobban eladott	best seller	Bestseller	best-seller
	new	novinka	nowość	új	new	Neuheit	nouveau
		RAL color					
		PVD = (physical vapor deposition) coating PVD-L = polished surface finish					
		LED					

INOX AISI 304
- vhodný do prostredia bez chlóru a oxidu siričitého

INOX AISI 316
- vhodný do prostredia s vysokým obsahom chlóru, oxidu siričitého, vysokej vlhkosti, do prímorských regiónov

INOX S.S. 2205- vhodný do prostredia s vysokým obsahom chlóru, oxidu siričitého, vysokej vlhkosti s prítomnosťou soli na pobreží a na voľnom mori.

INOX AISI 304
- suitable for the environment without chlorine and sulphur dioxide load

INOX AISI 316
- suitable for the environment with a high content of chlorine, sulphur dioxide load, high humidity, coastal regions

INOX S.S. 2205
- Suitable for environments with a high content of chlorine, sulfur dioxide, high humidity with salt on the coast and on the high seas.

INOX AISI 304
- przeznaczone dla środowiska bez dwutlenku siarki oraz chloru

INOX AISI 316
- przeznaczone dla środowiska o wysokiej zawartości dwutlenku siarki oraz chloru, wysokiej wilgotność oraz w regionach nadmorskie

INOX S.S. 2205
- Nadaje się do środowisk o wysokiej zawartości chloru, dwutlenku siarki, o wysokiej wilgotności, o dużym zasoleniu, w strefach nadmorskich, lub w bezpośrednim kontakcie z wodą morską.

INOX AISI 304
- alkalmazható olyan környezetben, ahol nincs klór és kén-dioxid terhelés

INOX AISI 316
- alkalmazható olyan környezetben, ahol magas a klór-, vagy kén-dioxid terhelés, magas a páratartalom, tengerparti régiókban

INOX S.S. 2205
-„Alkalmazható magas klór-, kén-dioxid-, sós nedvességtartalmú környezetben, valamint tengerparton és a nyílt tengeren".

INOX AISI 304
- geeignet in Umgebung ohne Chlor und Schwefeldioxid

INOX AISI 316
- geeignet in Umgebung mit einem hohen Gehalt an Chlor, Schwefeldioxid oder in Umgebung mit hoher Luftfeuchtigkeit, in Küstenregionen

INOX S.S. 2205
- geeignet für Umgebungen mit hohem Gehalt an Chlor, Schwefeldioxid und hoher Luftfeuchtigkeit mit Salz an der Küste und auf hoher See

INOX AISI 304
- Convenable pour les environnements sans chlore et/ ou bioxyde de soufre

INOX AISI 316
- Convenable pour les environnements avec un contenu élevé de chlore et/ ou de bioxyde de soufre, une grande humidité, régions maritimes

INOX S.S. 2205
- Convenable au milieu avec un contenu élevé du dioxyde de soufre, ainsi qu'au milieu humide contentant du sel, tel que le bord de mer ou la mer ouverte.

TEST / CERTIFICATE

LGA tested | AbP | IKA ES | STATIC STUDIO | Faculty of Civil Engineering | Gamin | INFRAPROJEKT s.c. | TESTED BY RISE SWEDEN | umakov TESTING

© právo na technické, tvarové a rozmerové zmeny vyhradené/ rights to technical, shape and dimensional changes reserved

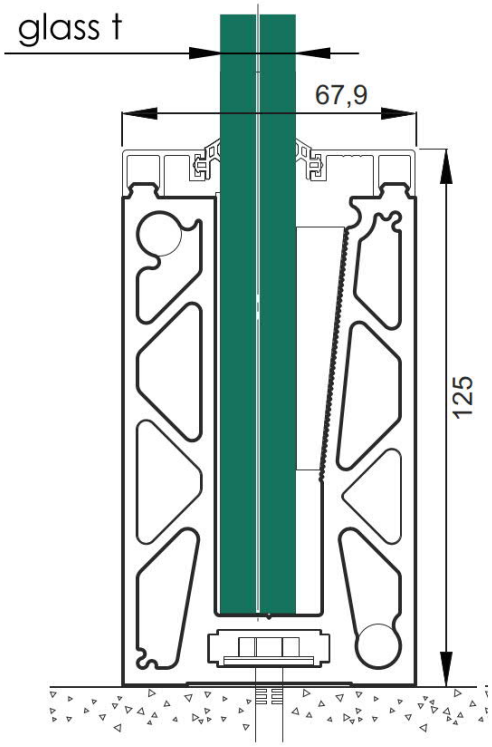
glass t
67,9
125

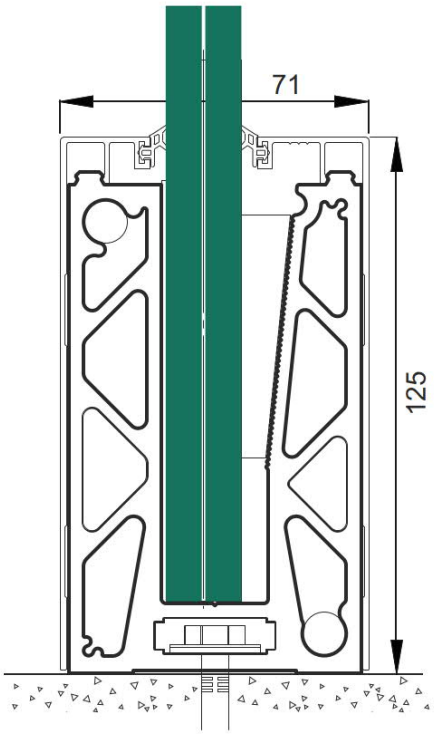
71
125